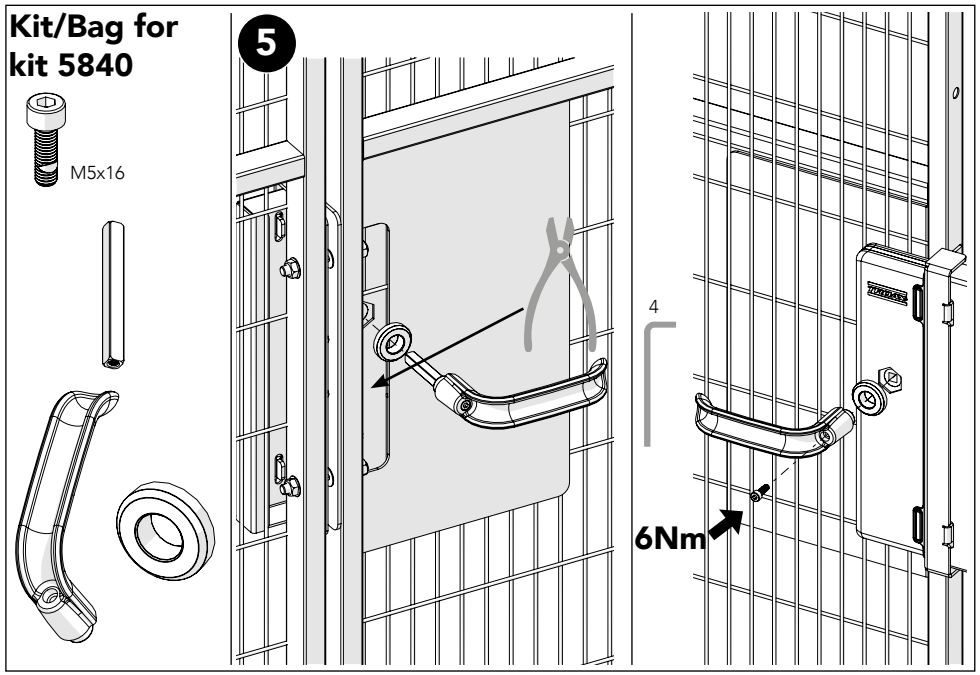

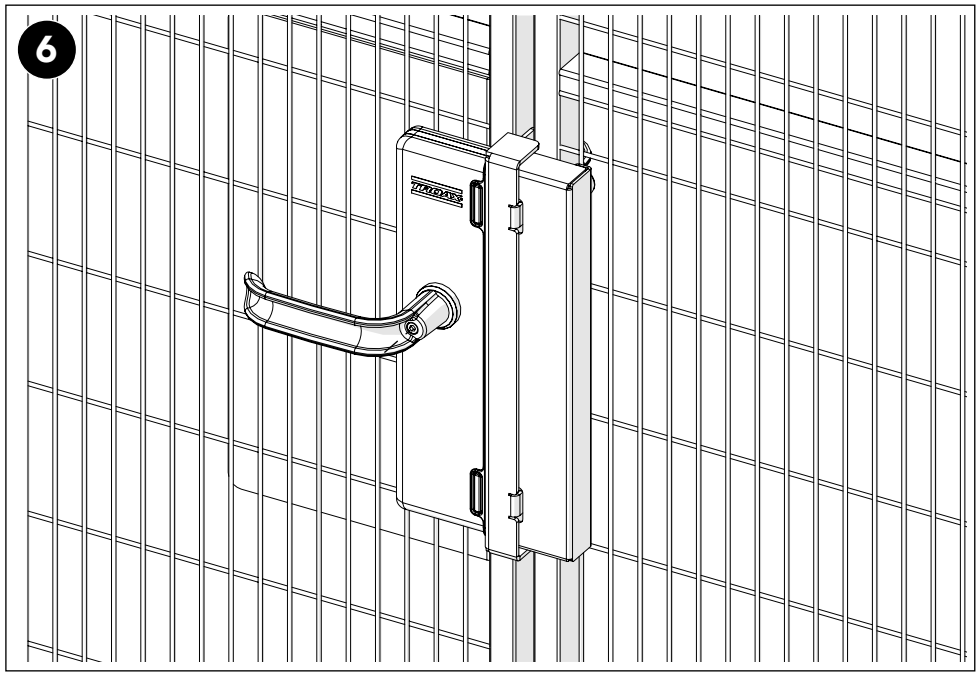

Art no: 88754719 ver. 002

ASSEMBLY INSTRUCTION
– JUST FOLLOW ME

EC LOCK DOUBLE HINGED DOOR WITHOUT CYLINDER

3D INTERACTIVE ASSEMBLY INSTRUCTION

KIT 36905840

Art no: 88754719 ver. 002

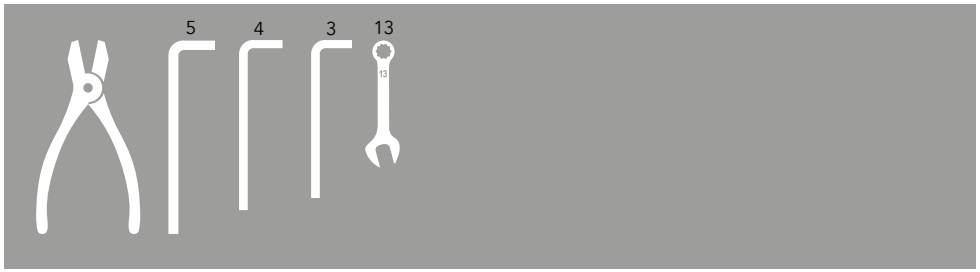

Kit EC Lock Double Hinged Door 36905840

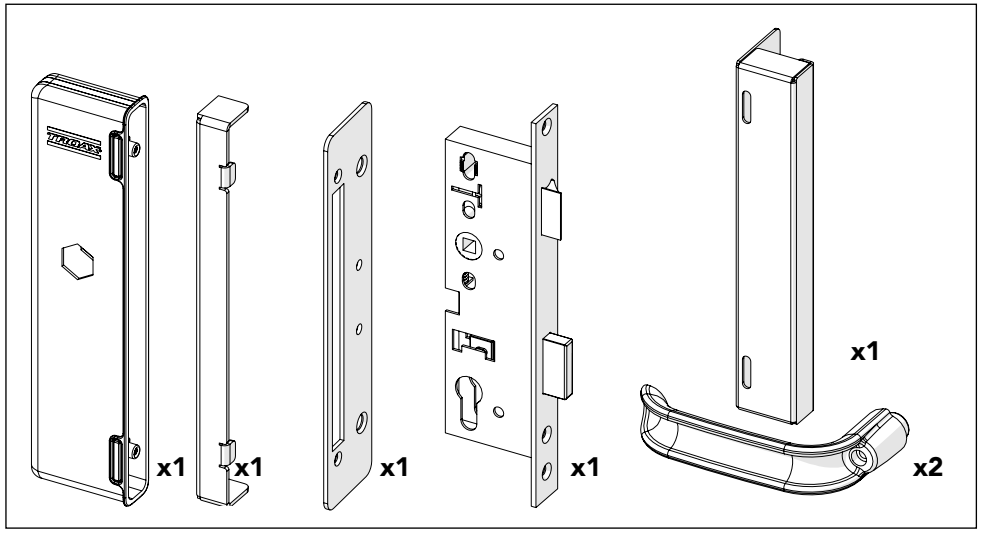

Bag for kit 5840 88695840

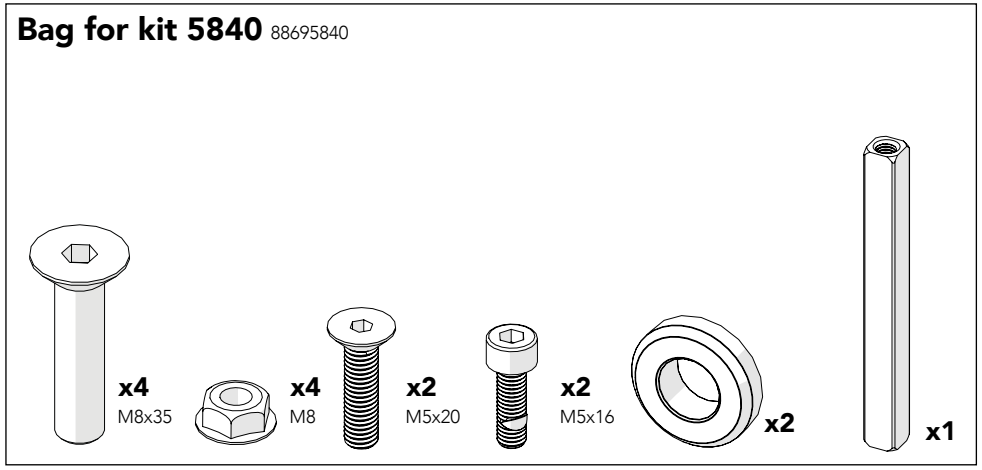

Art no: 88754719 ver. 002

Art no: 88754719 ver. 002

Bag for kit 5840

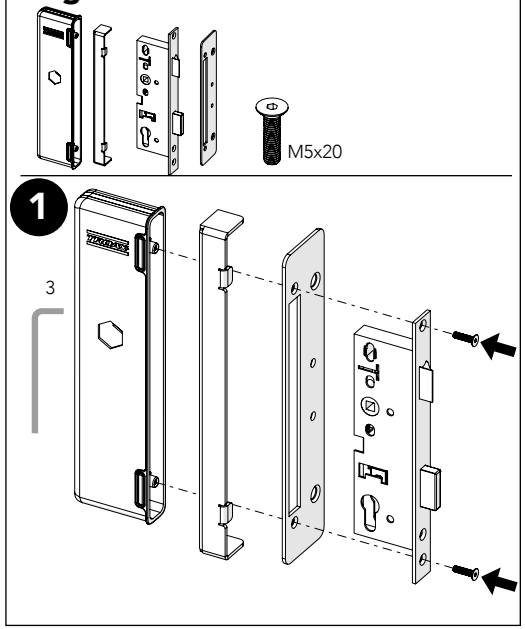

Bag for kit 5840

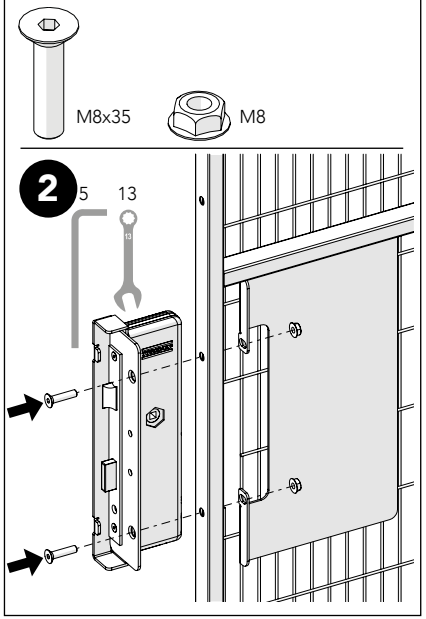

Bag for kit 5840

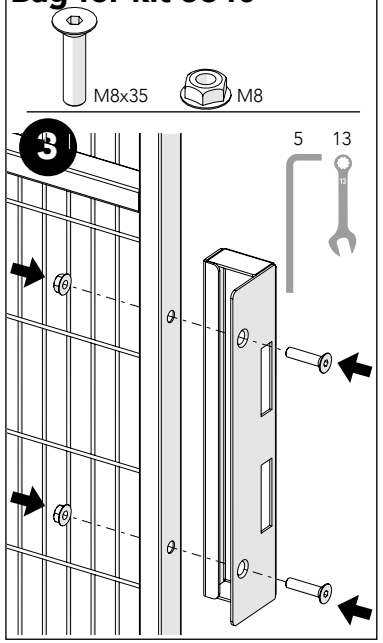
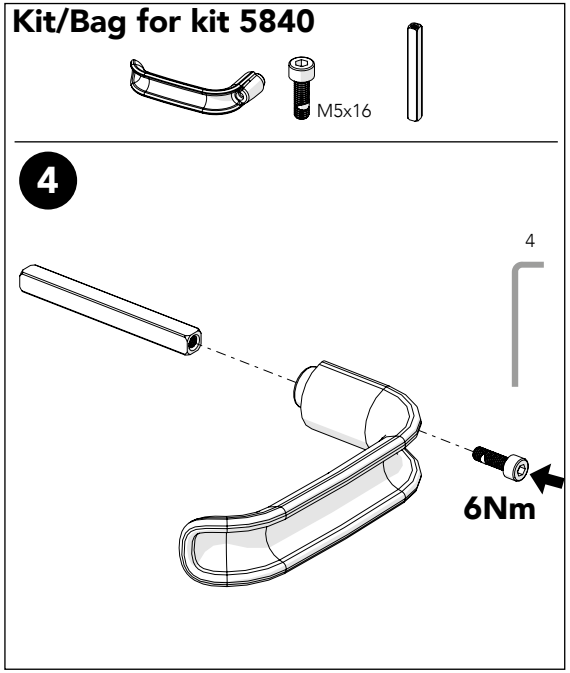
Kit/Bag for kit 5840