TROAX®

Warehouse Partitioning

Double sliding door AC Lock

Kit 36907670 , 36907600

Art no: 88754506 ver. 01 Print no: 202109-6597-EN

Follow me

www.troax.com

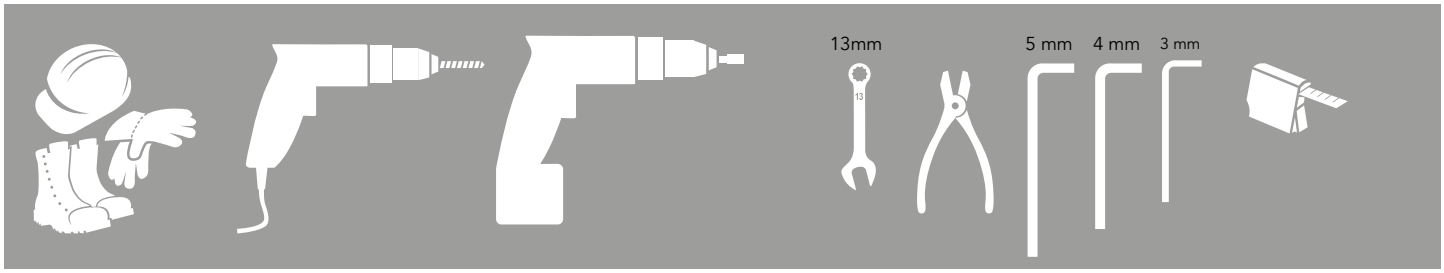

Kit Double sliding door AC Lock

Kit 7670 MHL UX AC Dbl. Slide 36907670

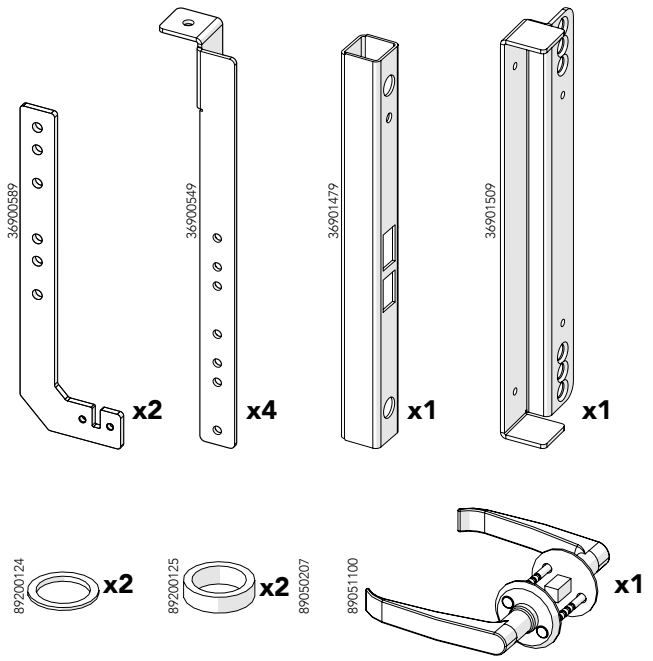

Bag for kit 7670 88697680

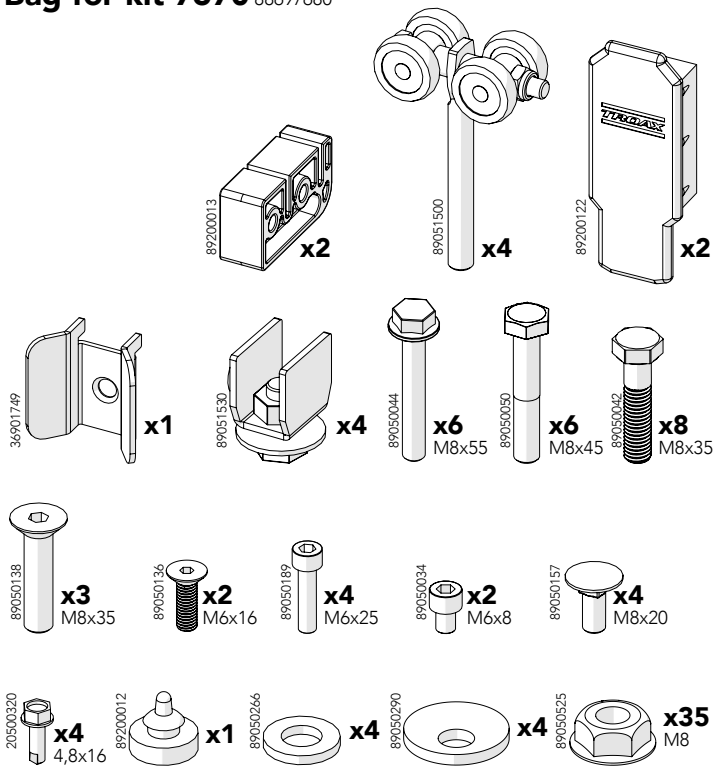

Art no: 88754506 ver. 01

Kit 7600 MHL UX AC Slide door 36907600

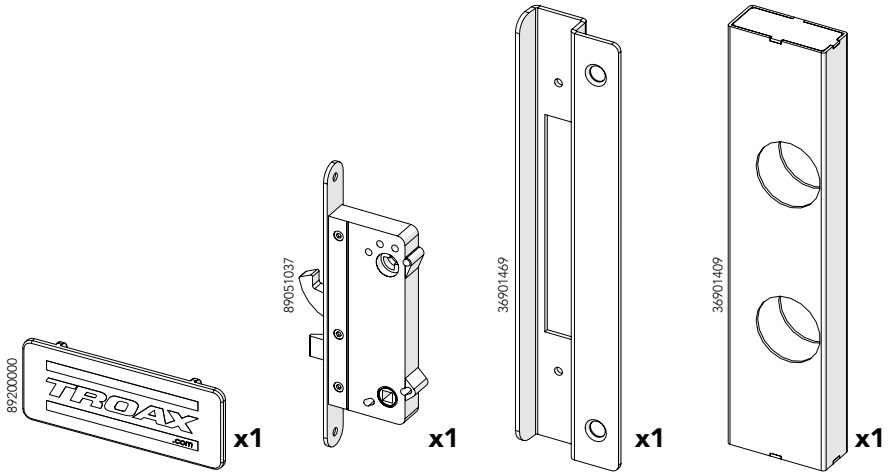

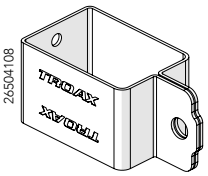

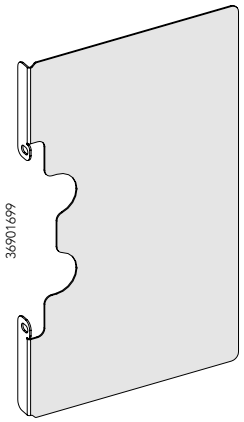

Bag for Kit 7600 88697610

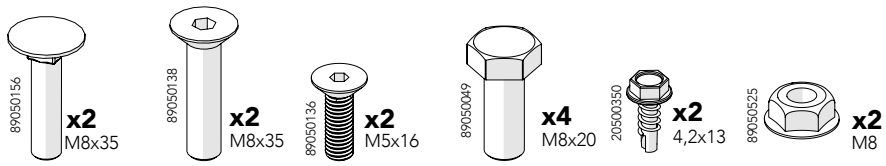

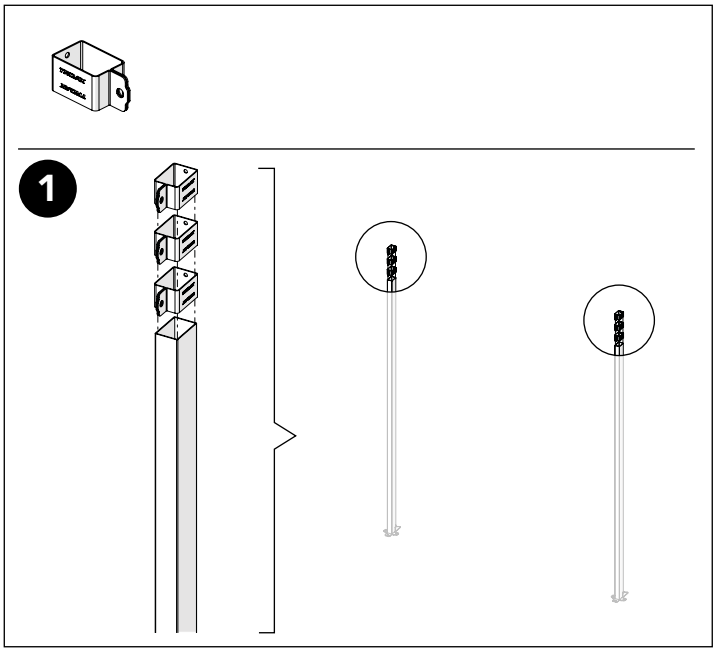

Bag for kit 7670

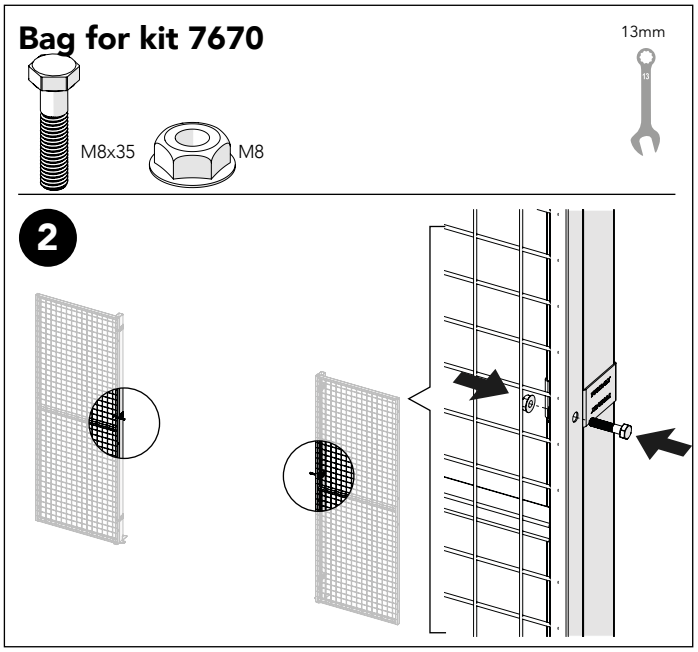

Kit 7670 + Bag for kit 7670

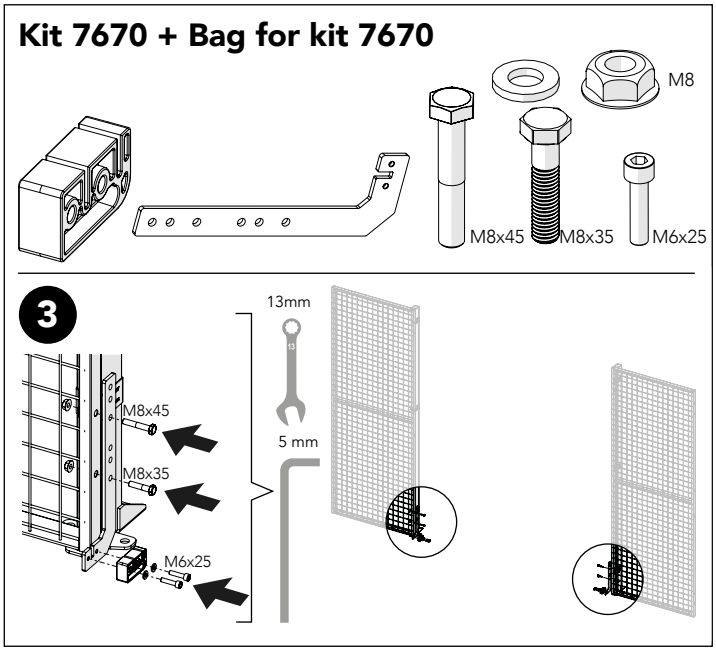

Kit 7670 + Bag for kit 7670

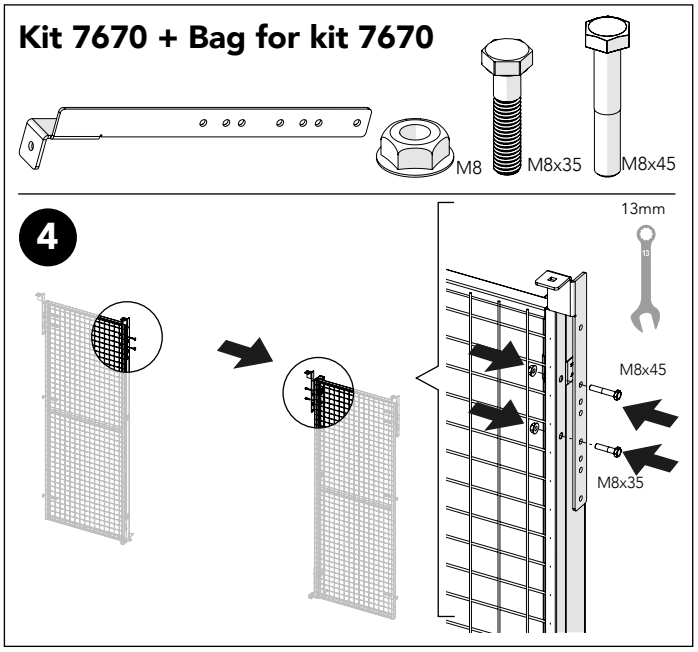

Kit 7670 + Bag for kit 7670

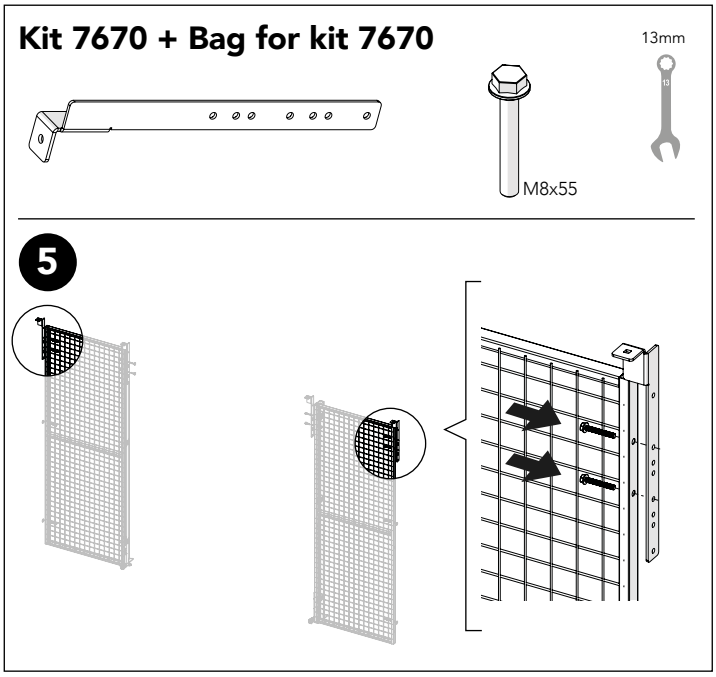

Bag for kit 7670

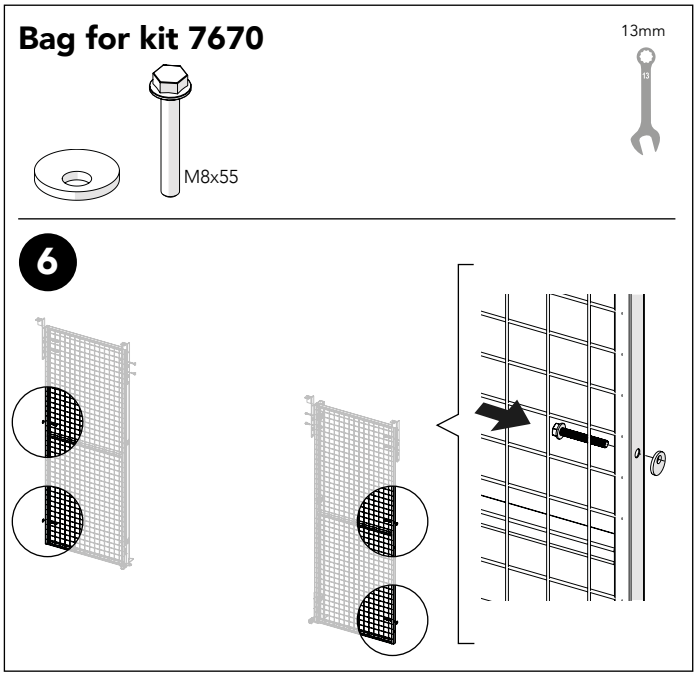

Art no: 88754506 ver. 01

Bag for kit 7670

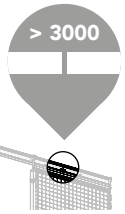

7

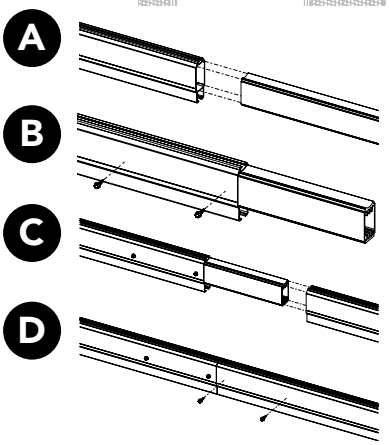

Bag for kit 7670

8

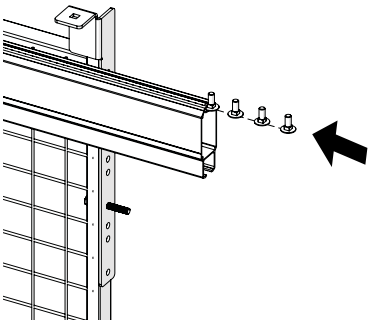

9

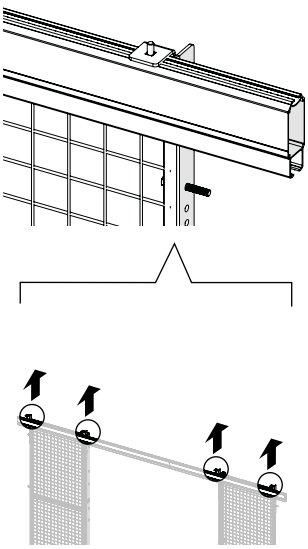

Bag for kit 7670

10

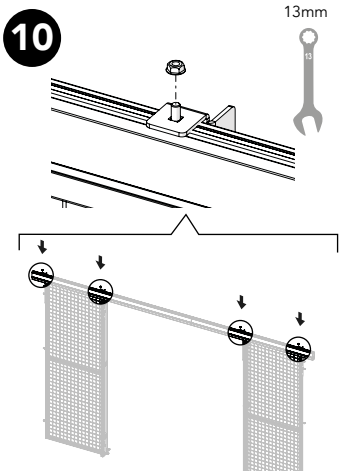

Bag for kit 7600

11

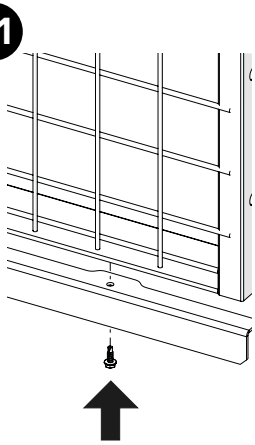

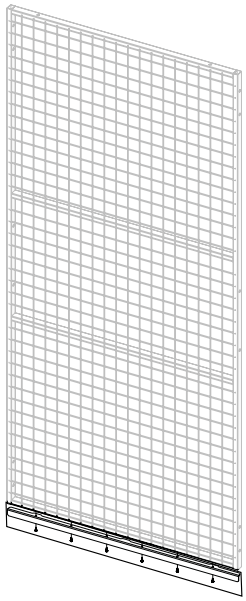

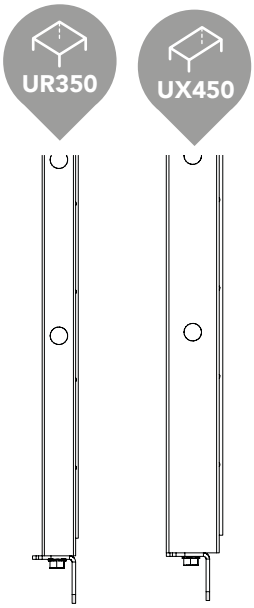

Art no: 8875405 ver. 01

Bag for kit 7670

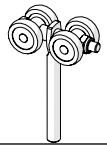

12

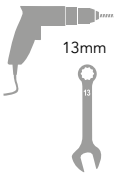

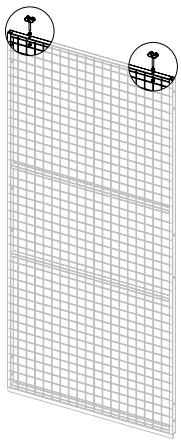

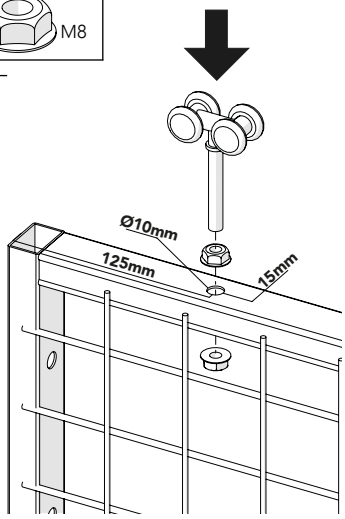

Bag for kit 7670

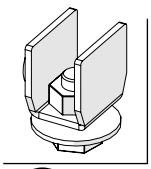

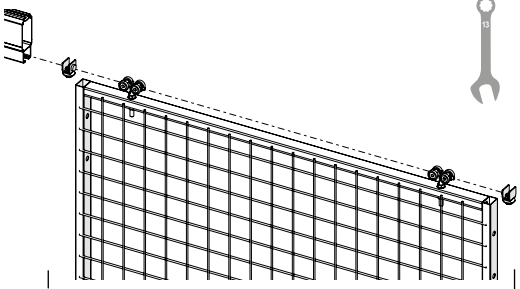

13

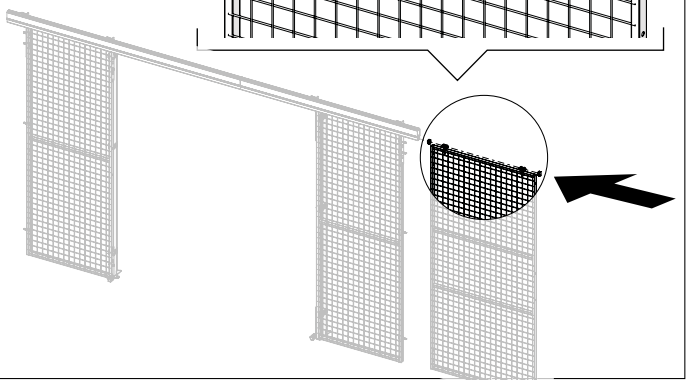

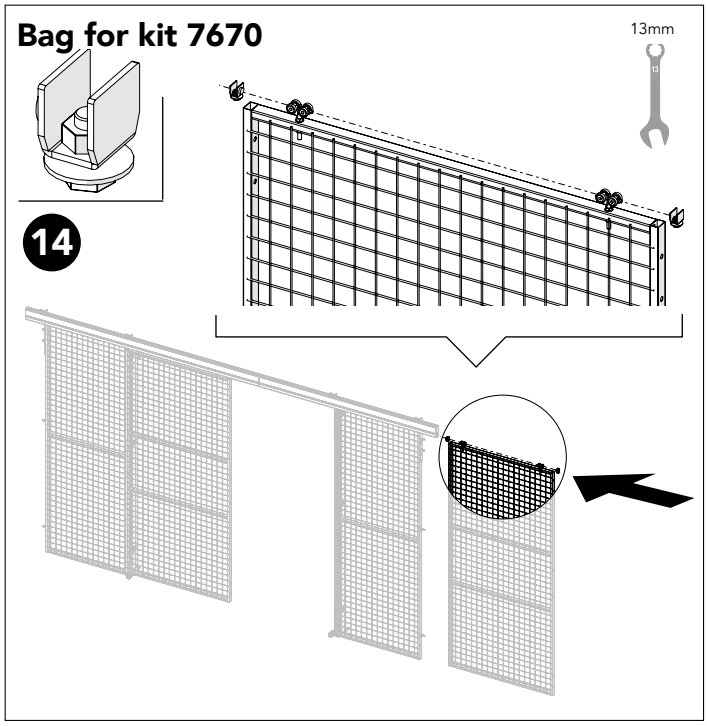

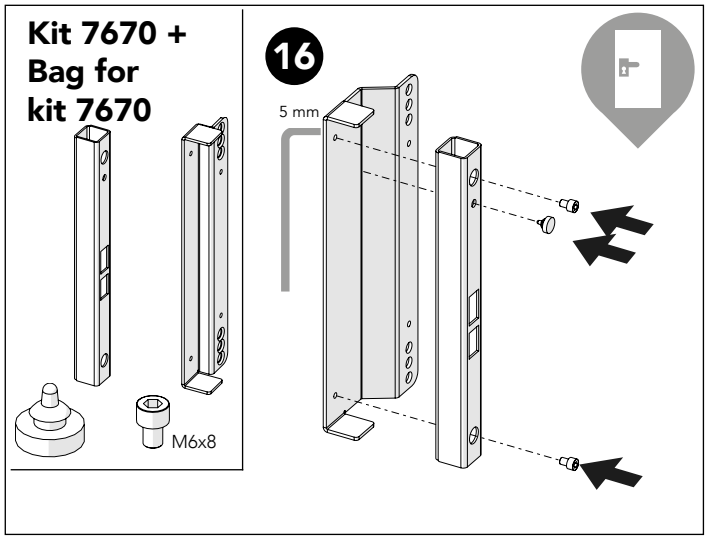

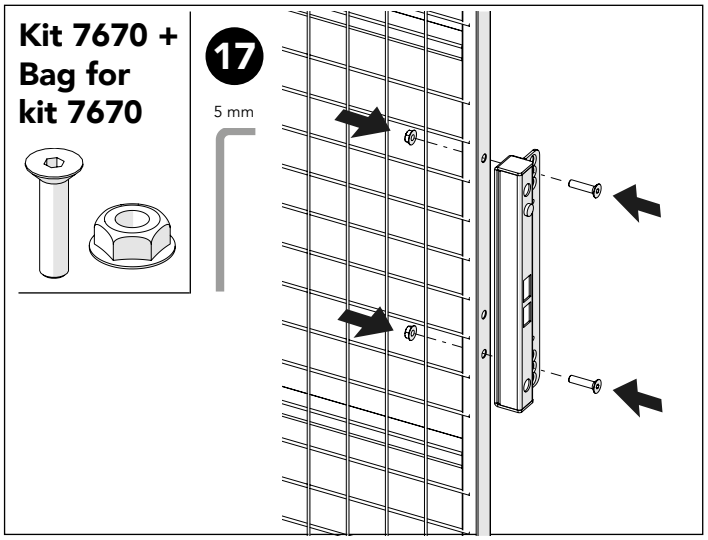

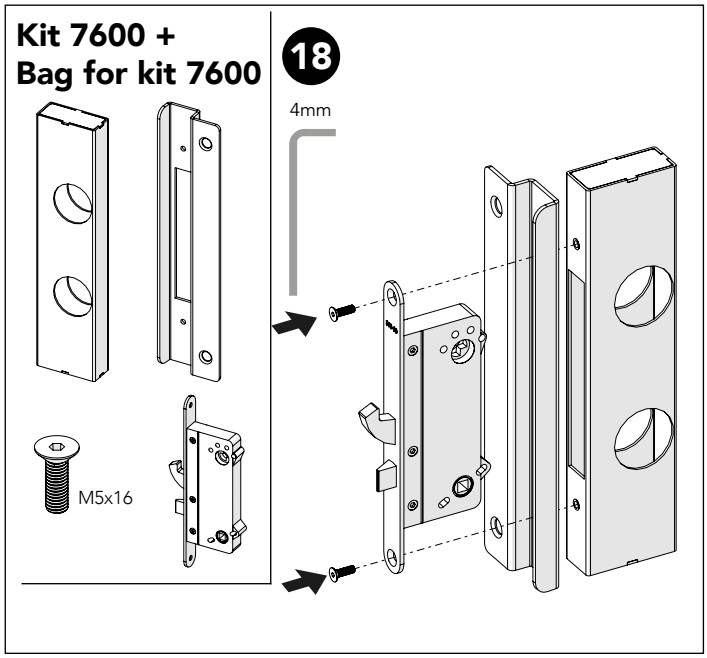

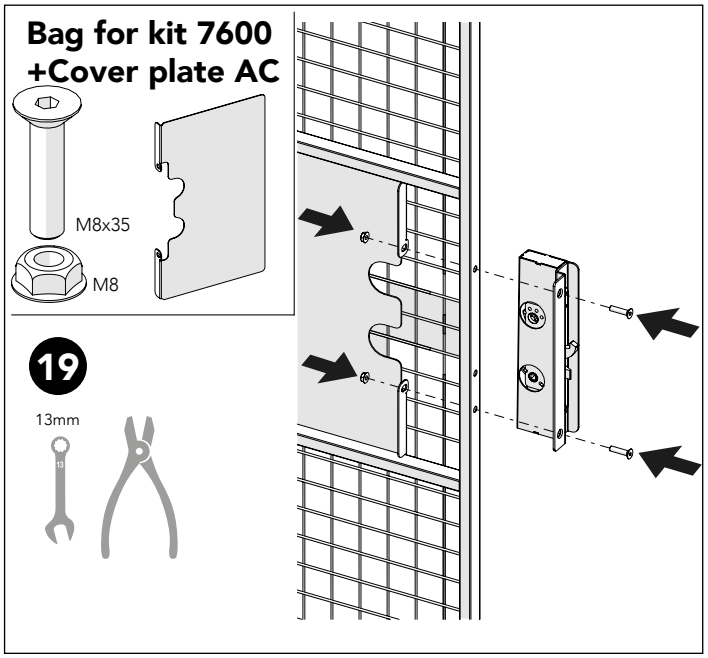

Art no: 88754506 ver. 01

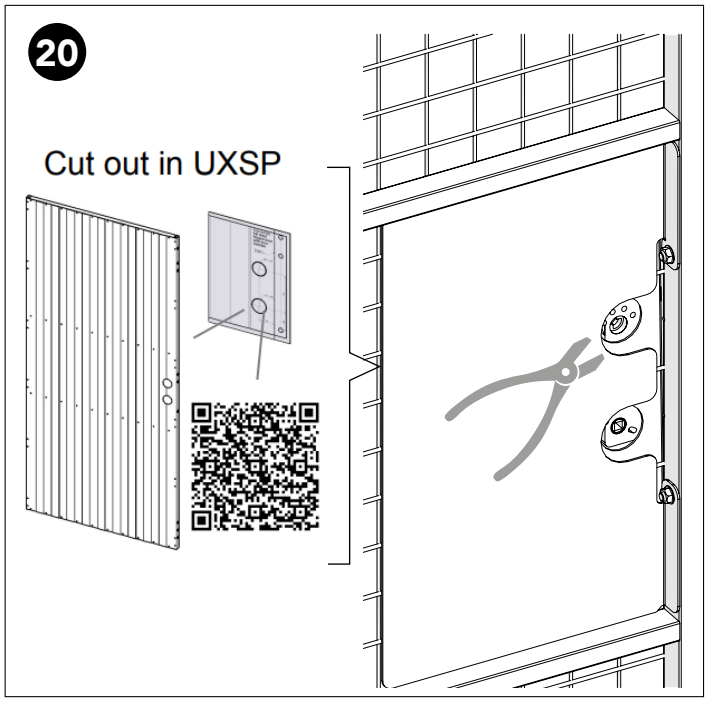

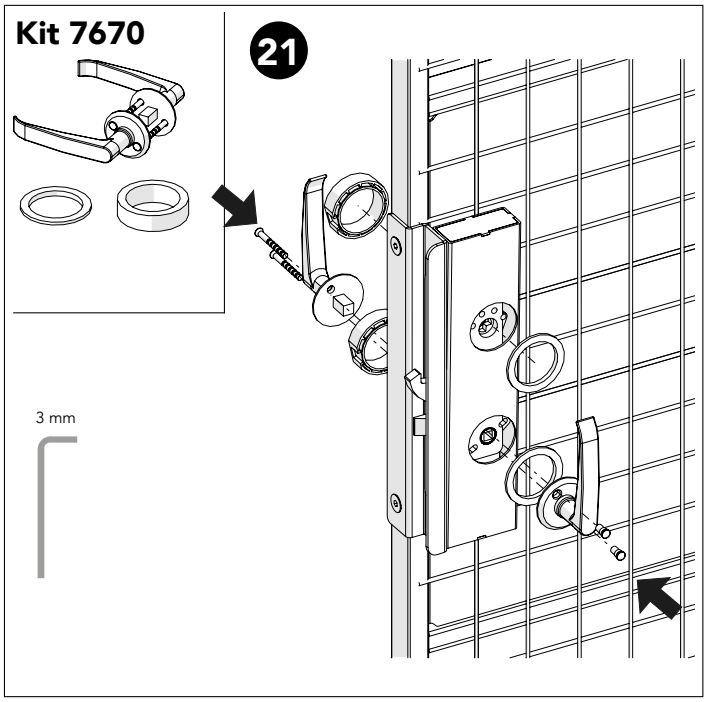

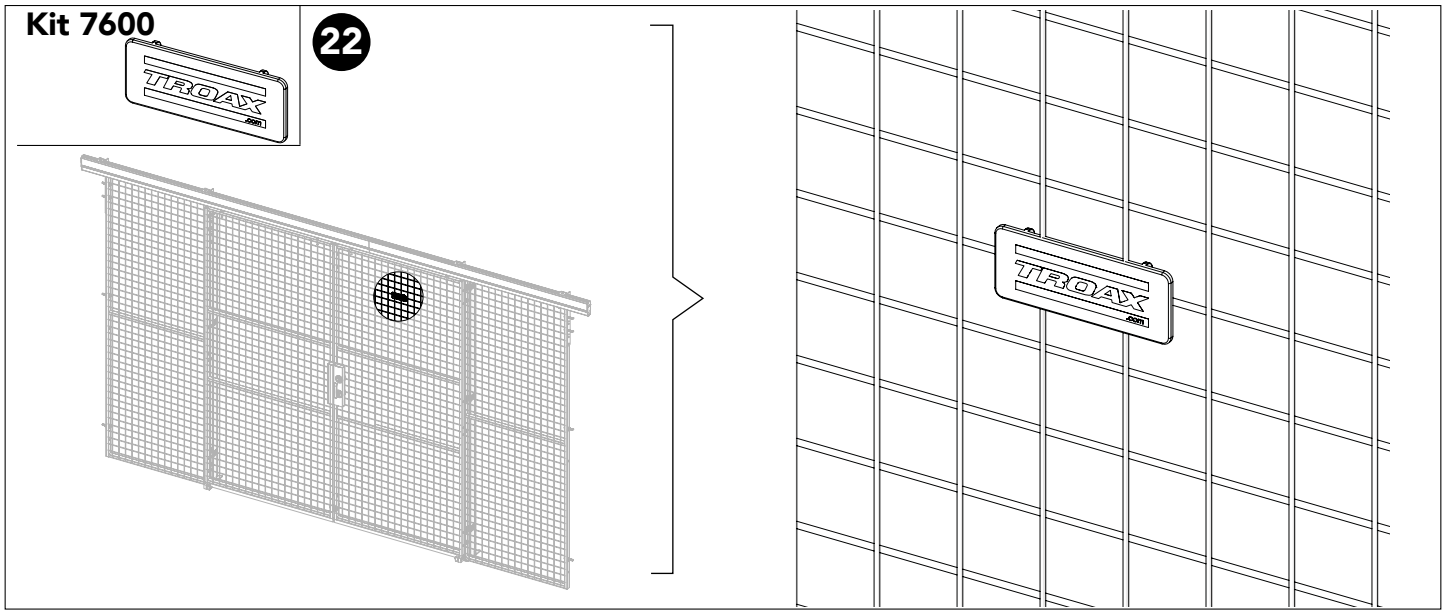

Art no: 88754506 ver. 01