TROAX®

Machine guarding

Double Telescopic

Kit 36906265

Art no: 88754557 ver. 03 Print no: 202008-9017-EN

Follow me

www.troax.com

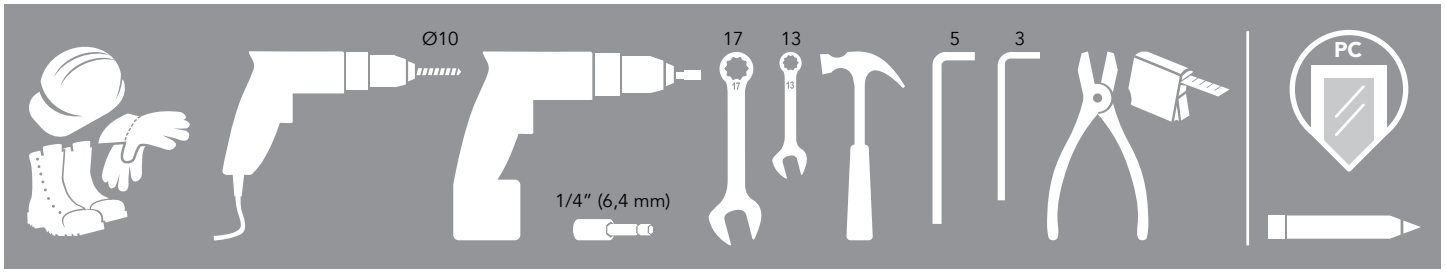

Kit Double Telescopic 36906265

Kit 6265 Double Telescopic 36906265

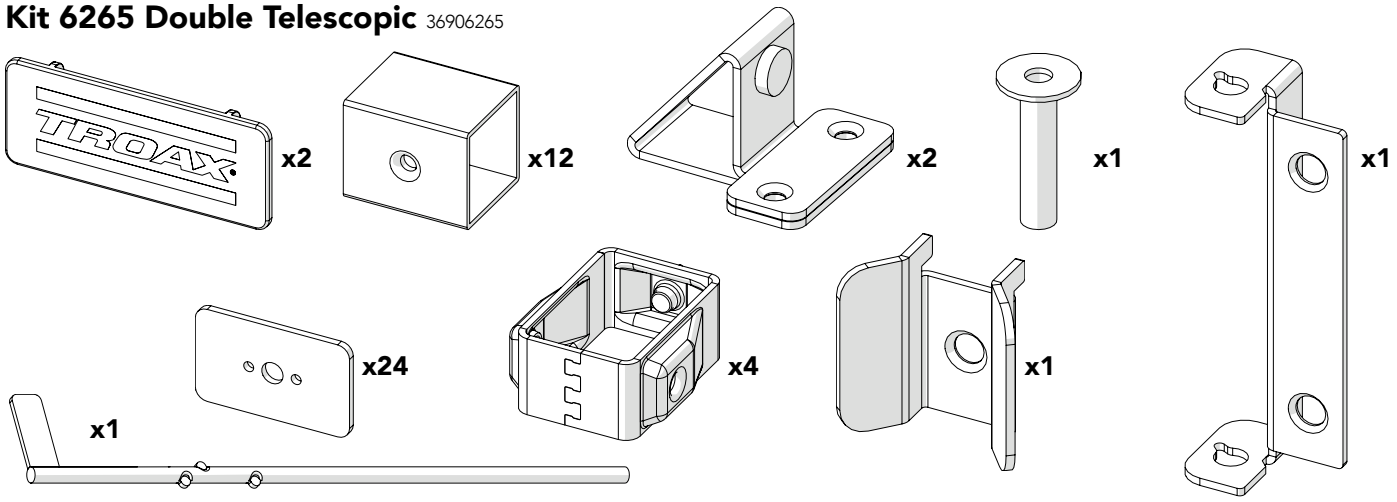

Bag Kit 6265 88696265

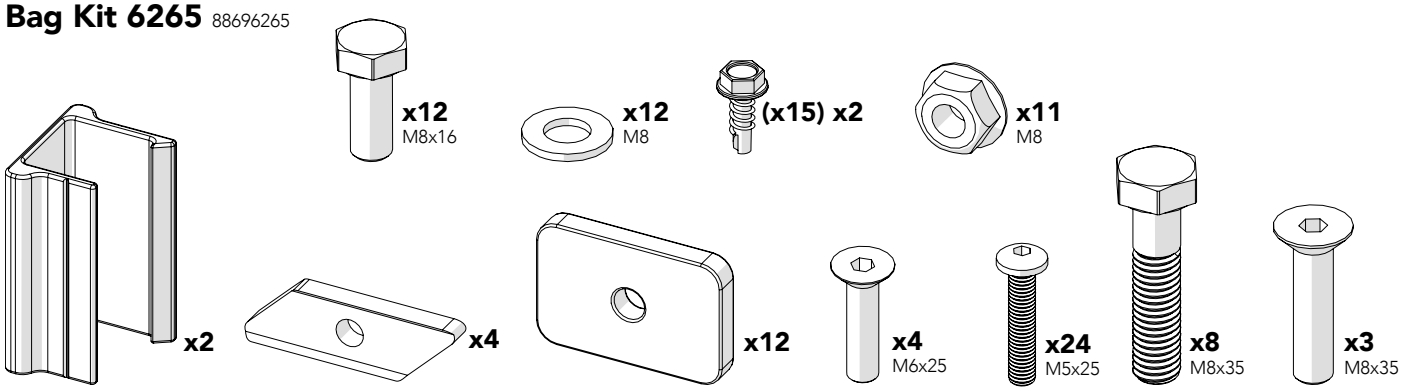

Art no: 88754557 ver. 02

Kit Bracket SmF 36700074

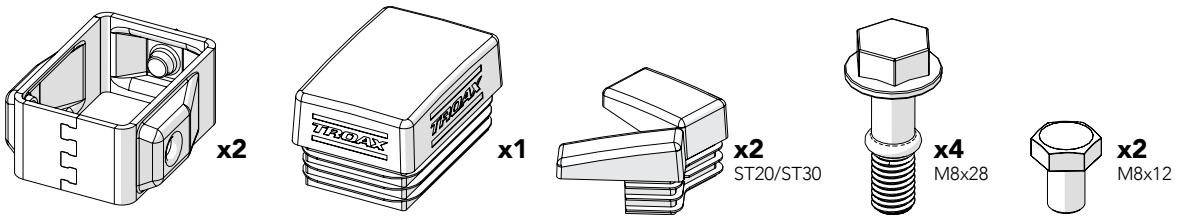

4

Kit Bracket SmF

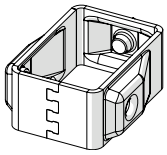

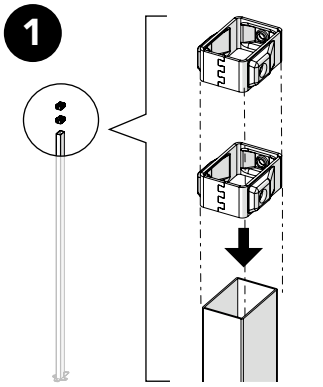

Kit Bracket SmF

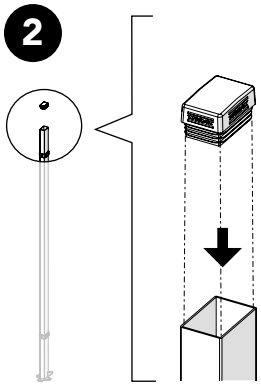

Kit Bracket SmF

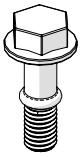

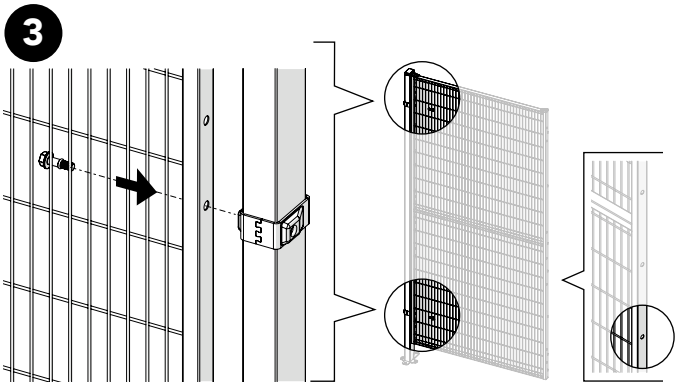

Kit Bracket SmF

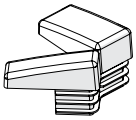

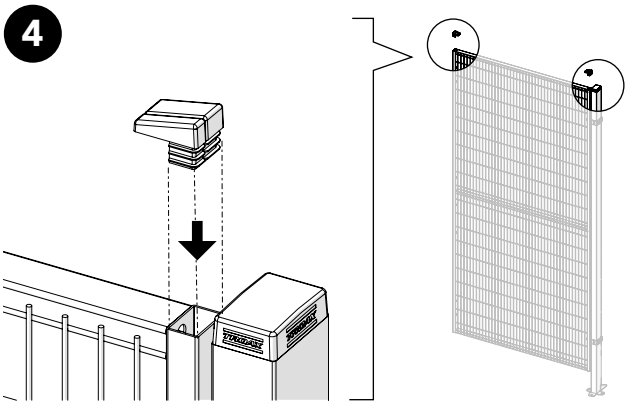

Kit 6265

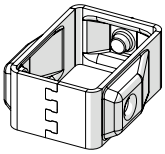

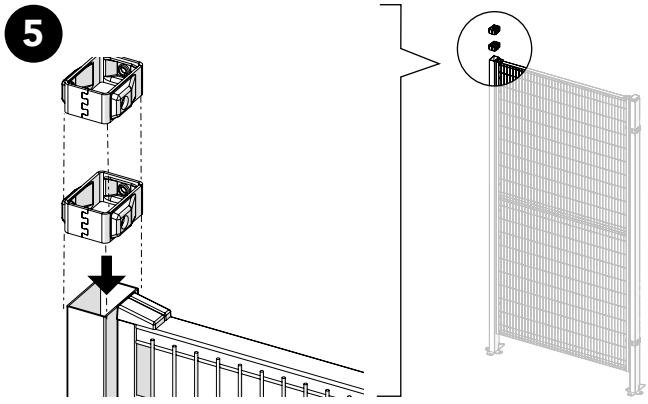

Kit Bracket SmF

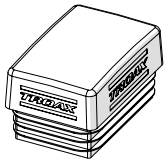

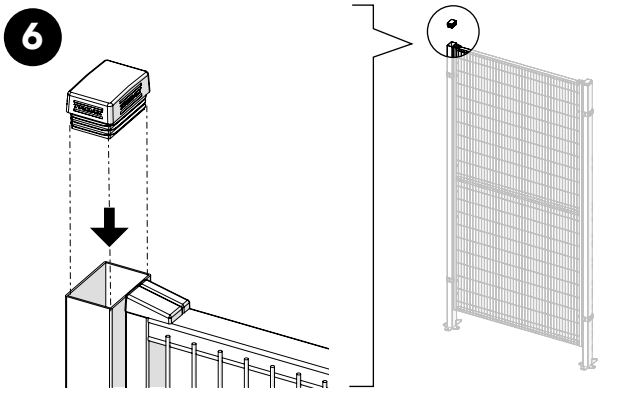

Kit Bracket SmF

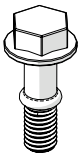

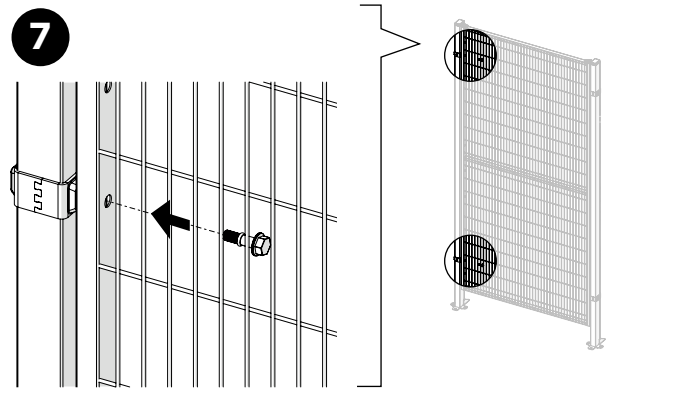

Art no: 88754557 ver. 02

Kit Bracket SmF

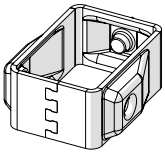

8

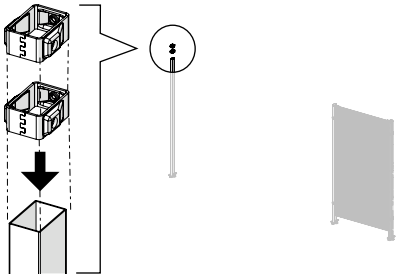

Kit Bracket SmF

9

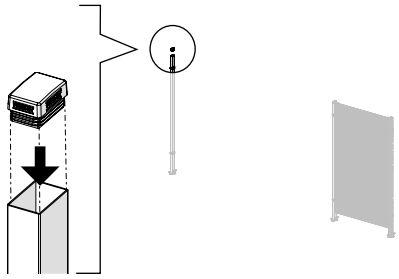

Kit Bracket SmF

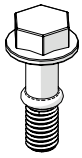

10

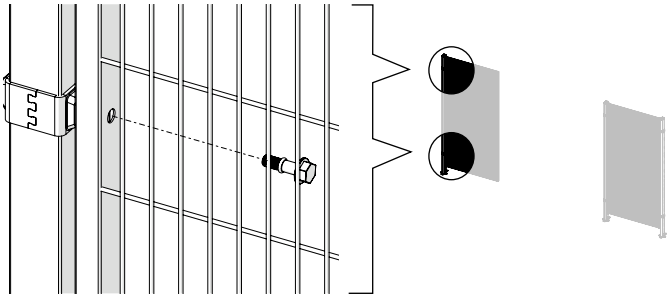

Kit Bracket SmF

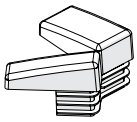

11

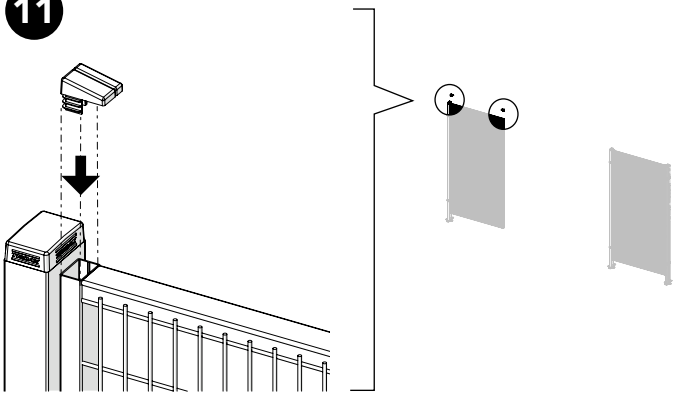

Kit Bracket SmF

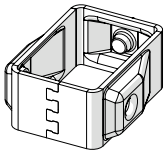

12

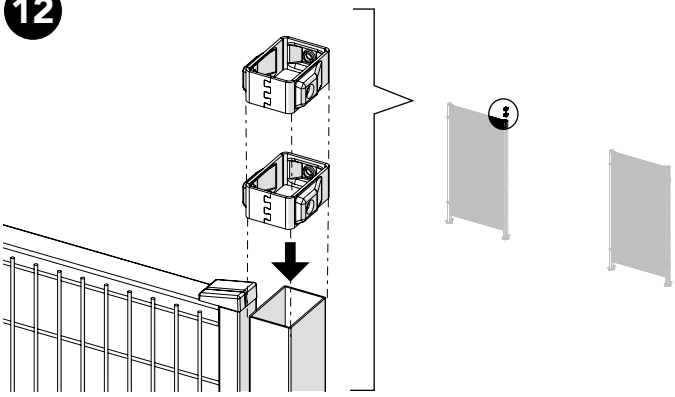

Kit Bracket SmF

13

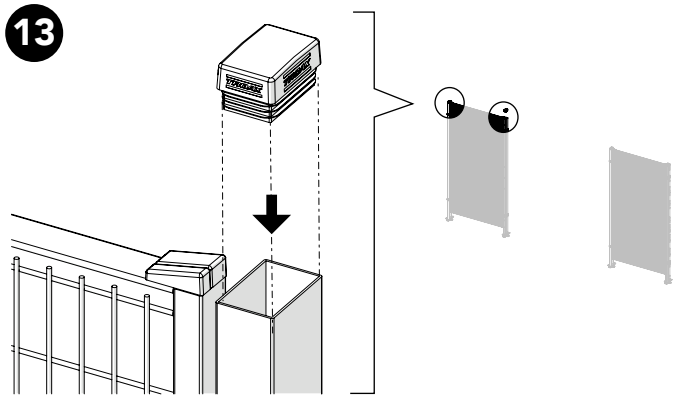

Kit Bracket SmF

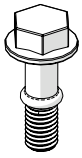

14

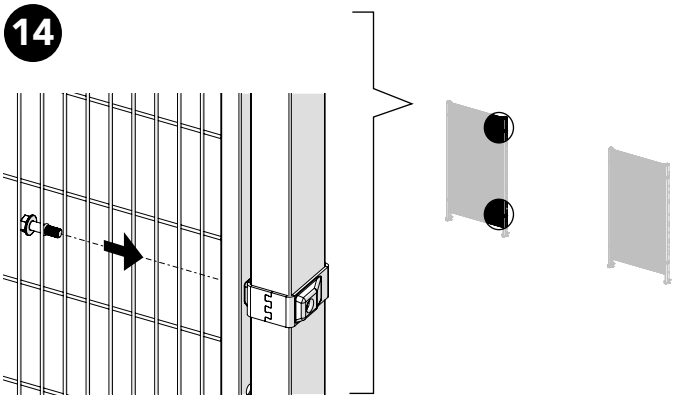

Art no: 88754557 ver. 02

Bag kit 6265

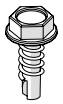

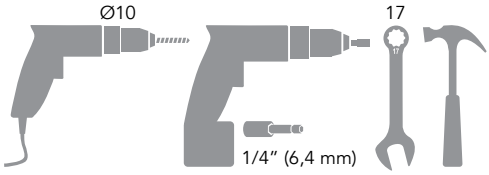

15

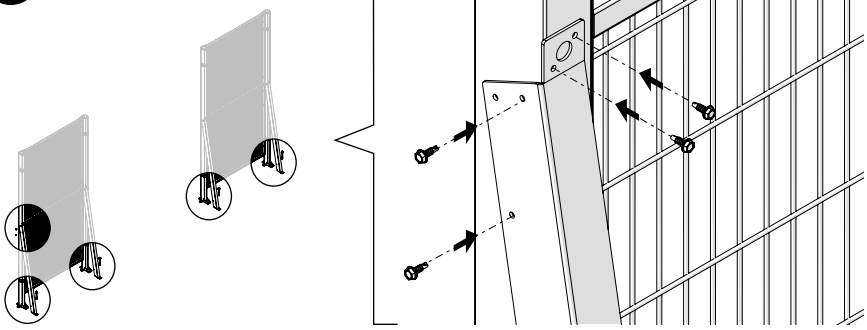

16

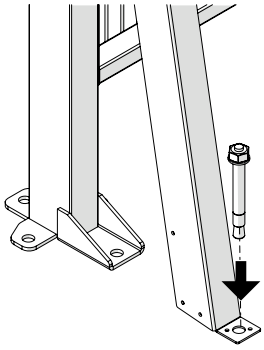

Kit 6265 + Bag kit 6265

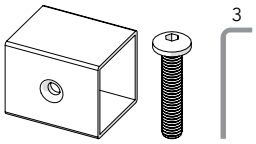

17

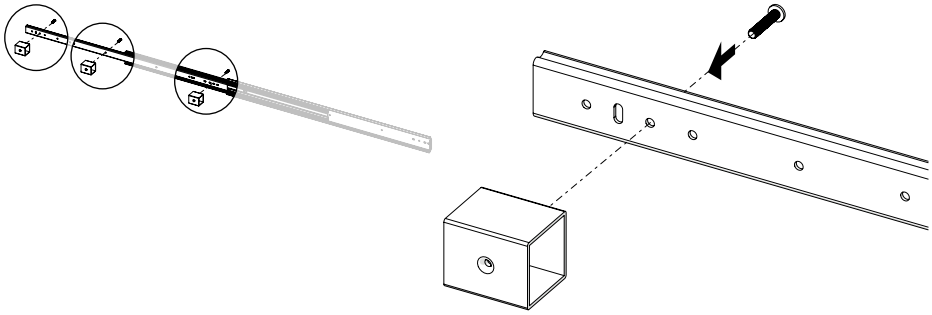

Kit 6265 + Bag kit 6265

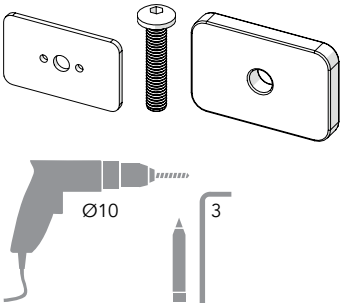

18

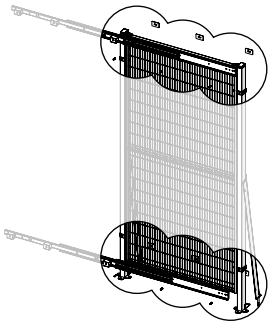

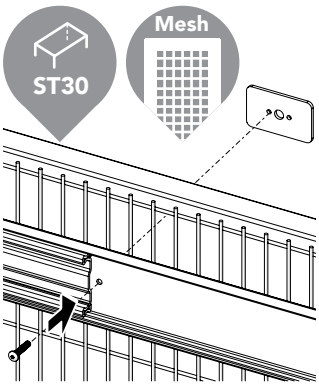

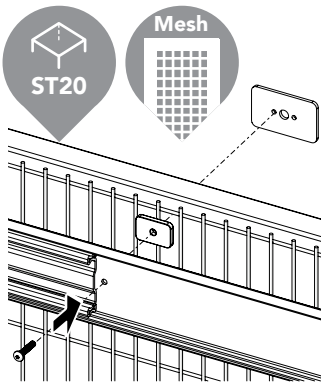

a

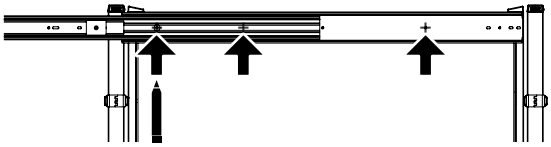

b

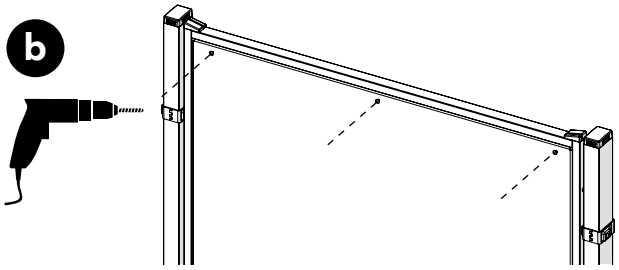

c

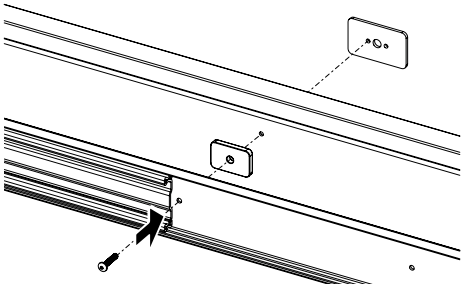

Art no: 88754557 ver. 02

Kit Bracket SmF

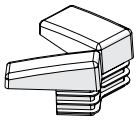

19

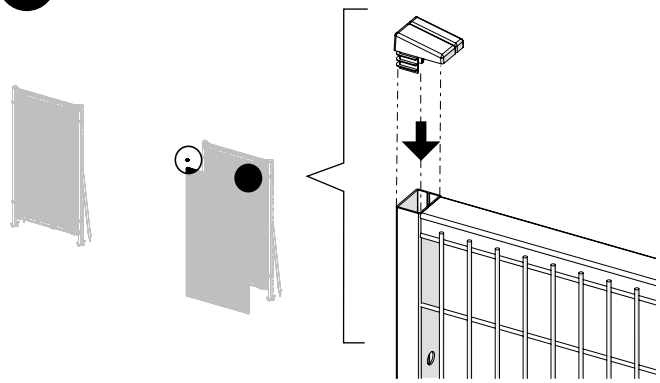

Bag kit 6265

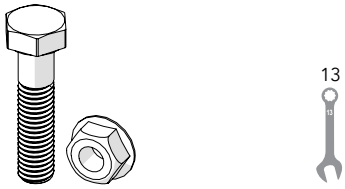

20

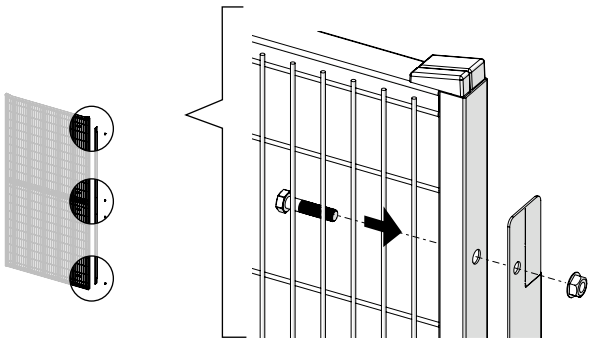

Kit 6265 + Bag kit 6265

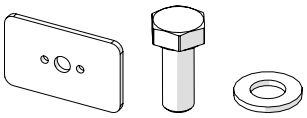

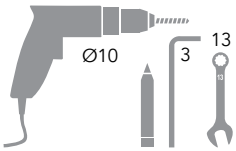

21

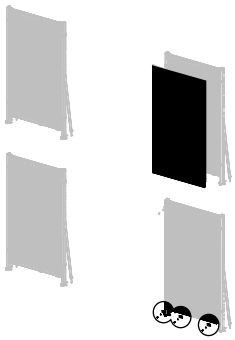

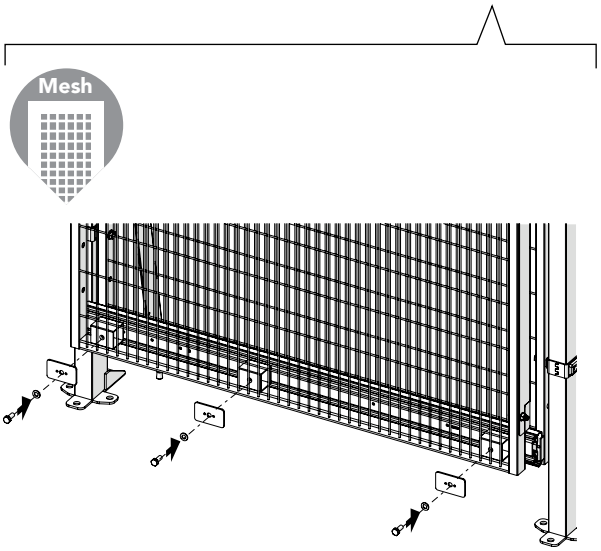

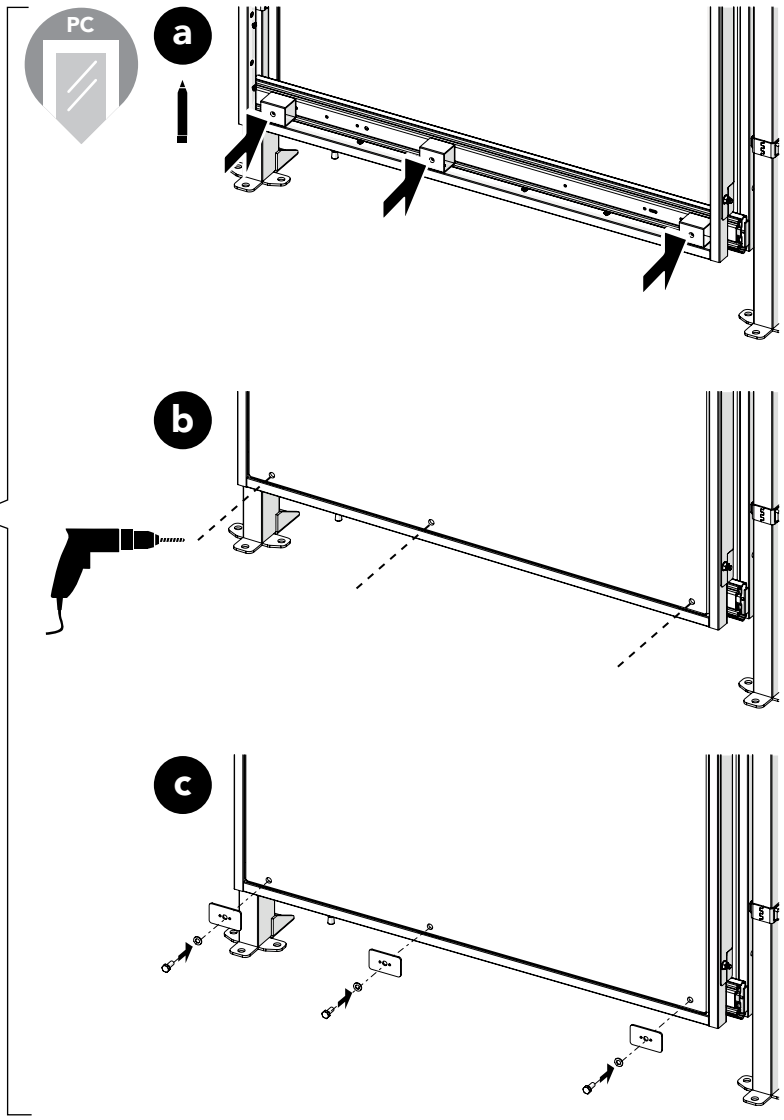

Art no: 88754557 ver. 02

Kit 6265 + Bag kit 6265

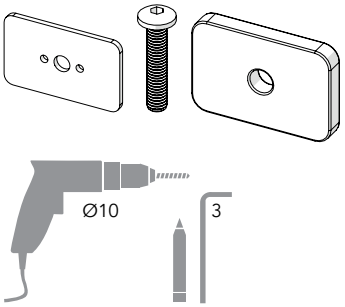

22

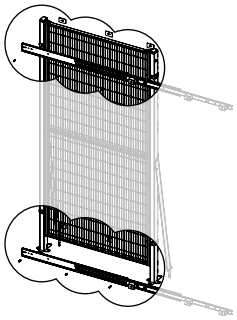

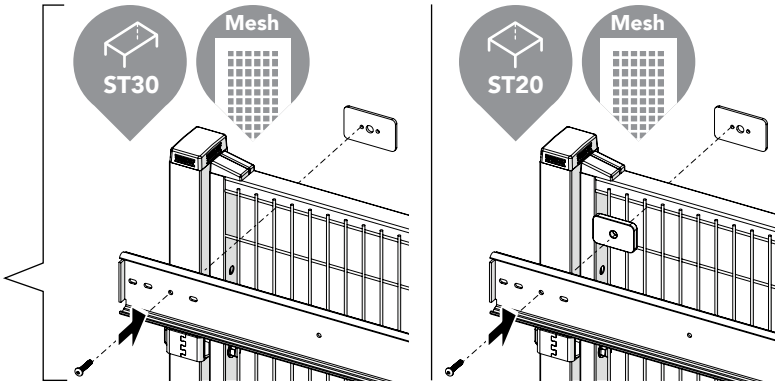

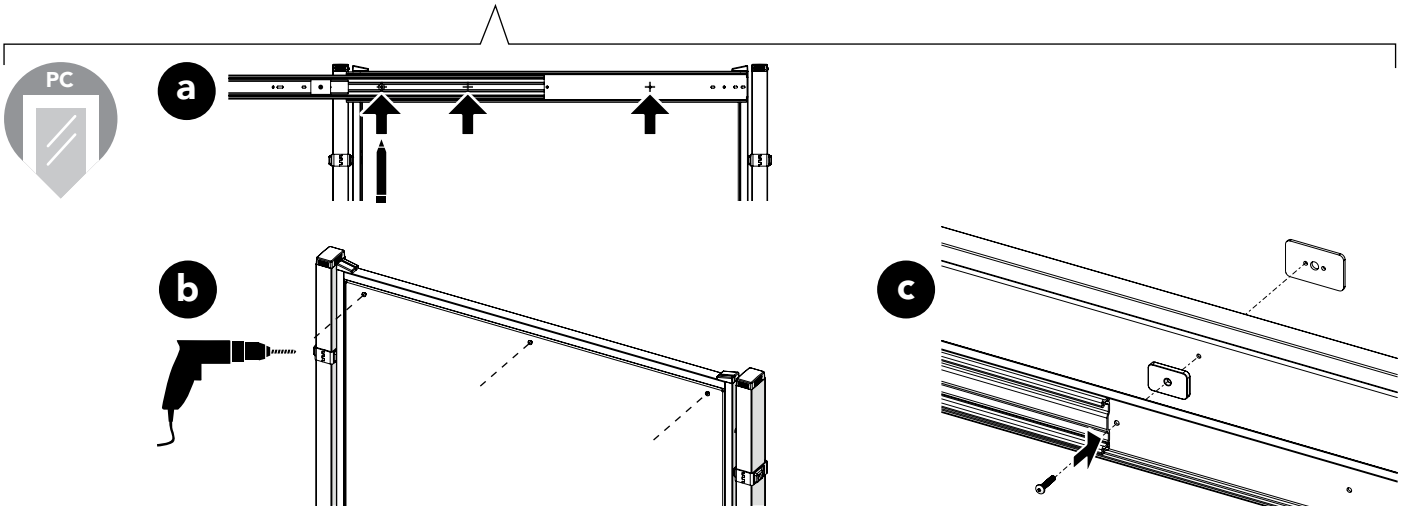

Kit Bracket SmF

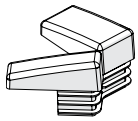

23

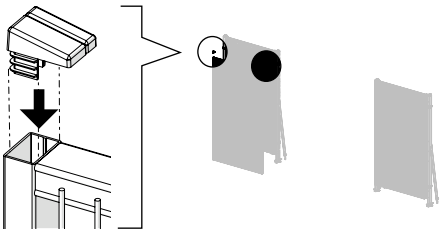

Bag kit 6265

24

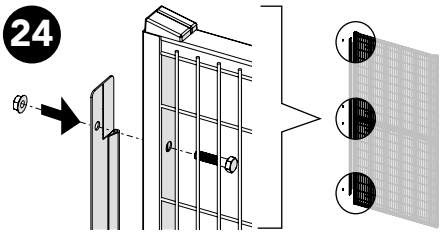

Kit 6265 + Bag kit 6265

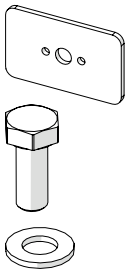

25

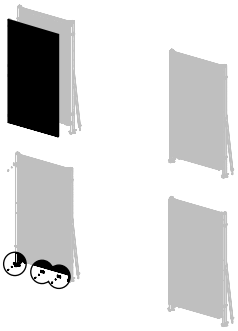

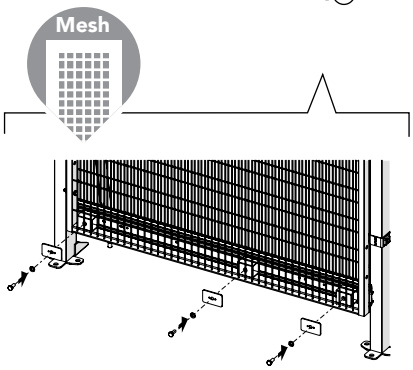

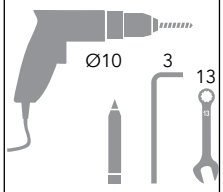

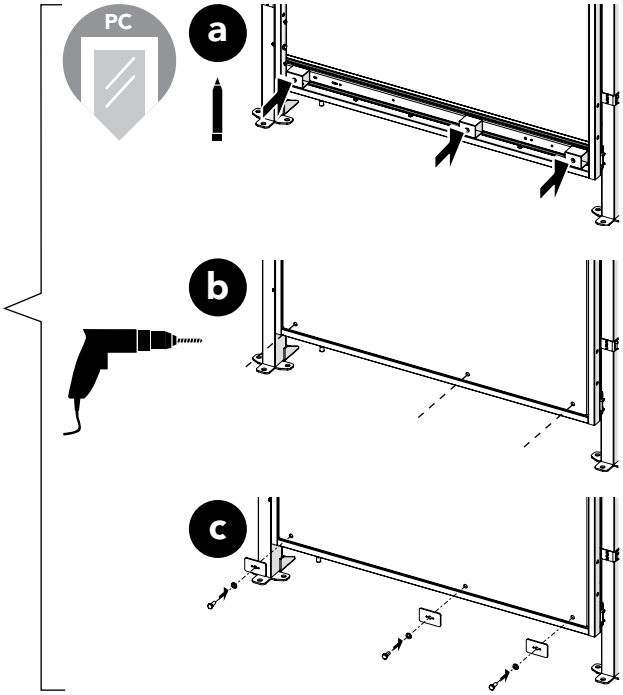

Art no: 88754557 ver. 02

Kit 6265 + Bag kit 6265

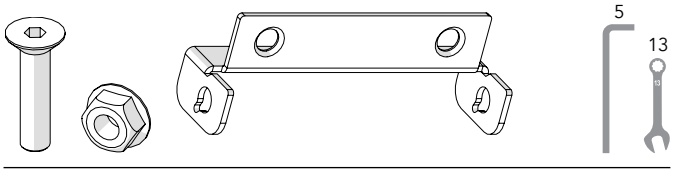

26

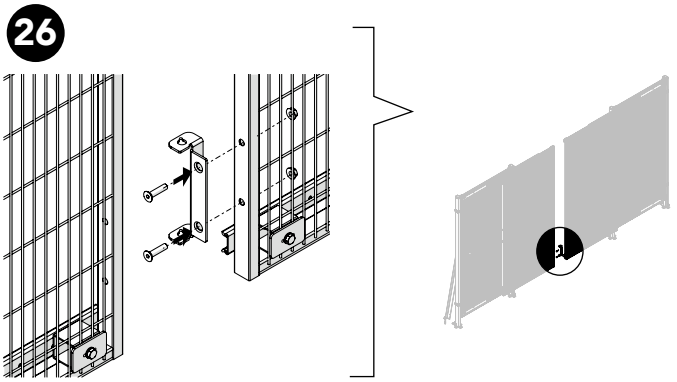

Kit 6265

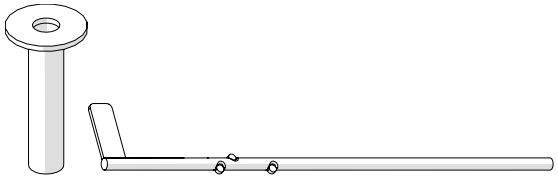

27

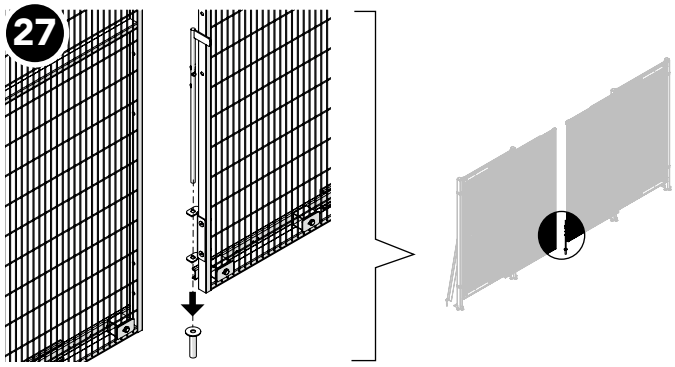

Kit 6265 + Bag kit 6265

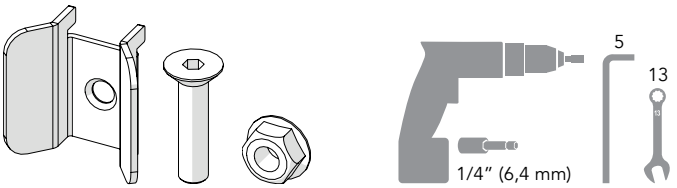

28

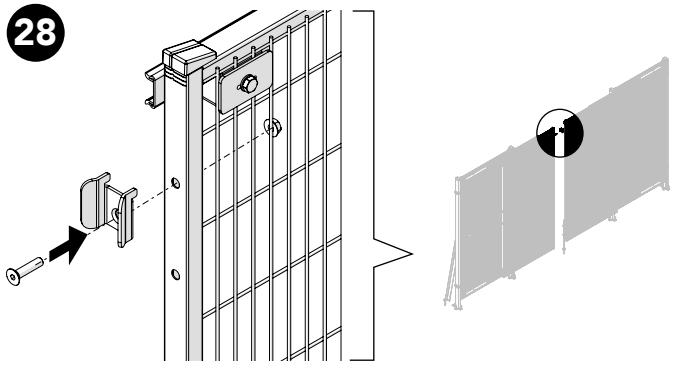

Kit 6265 + Bag kit 6265

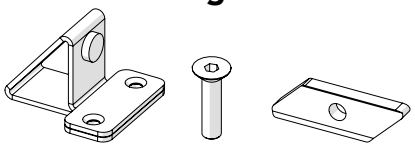

29

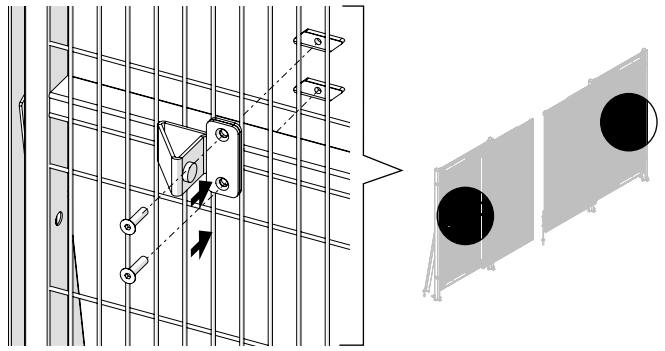

Art no: 88754557 ver. 02

Kit 6265

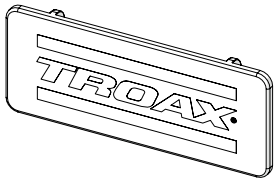

30

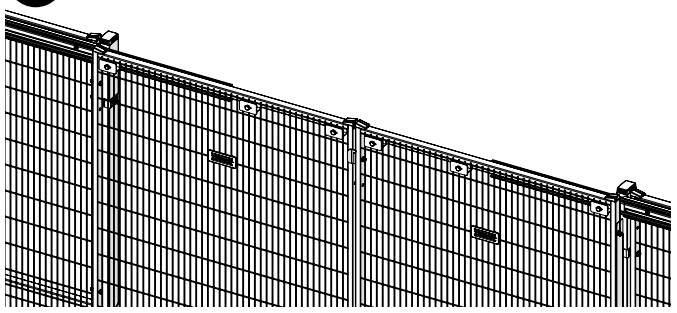
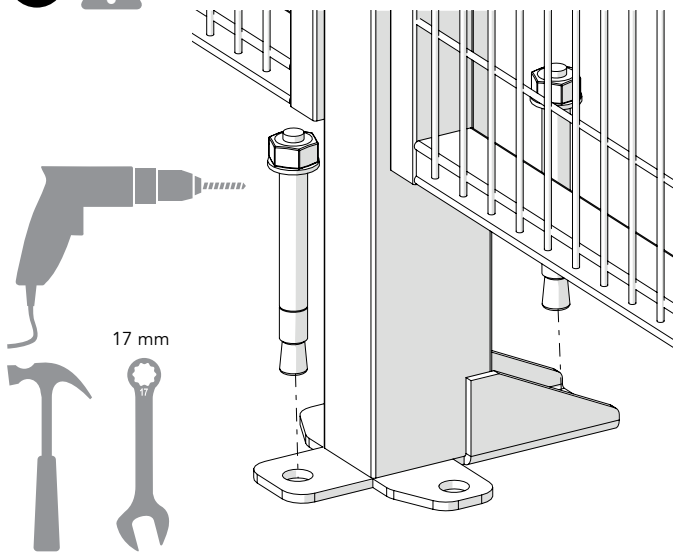
31