Follow Me

Spaltlist

Gap list

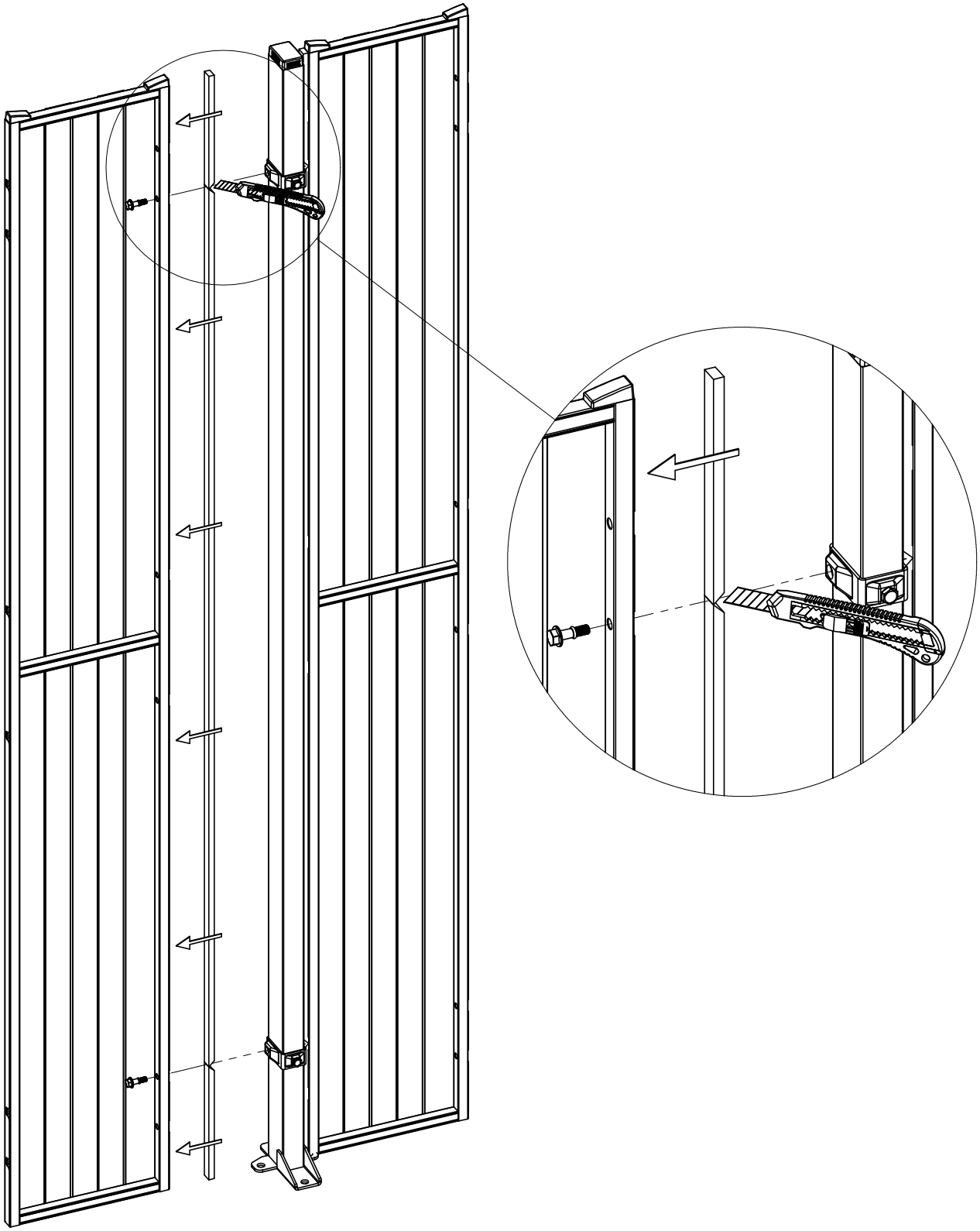

SmarTeam ID: 00048486

Follow Me

Smart Fix

Hinged Door List

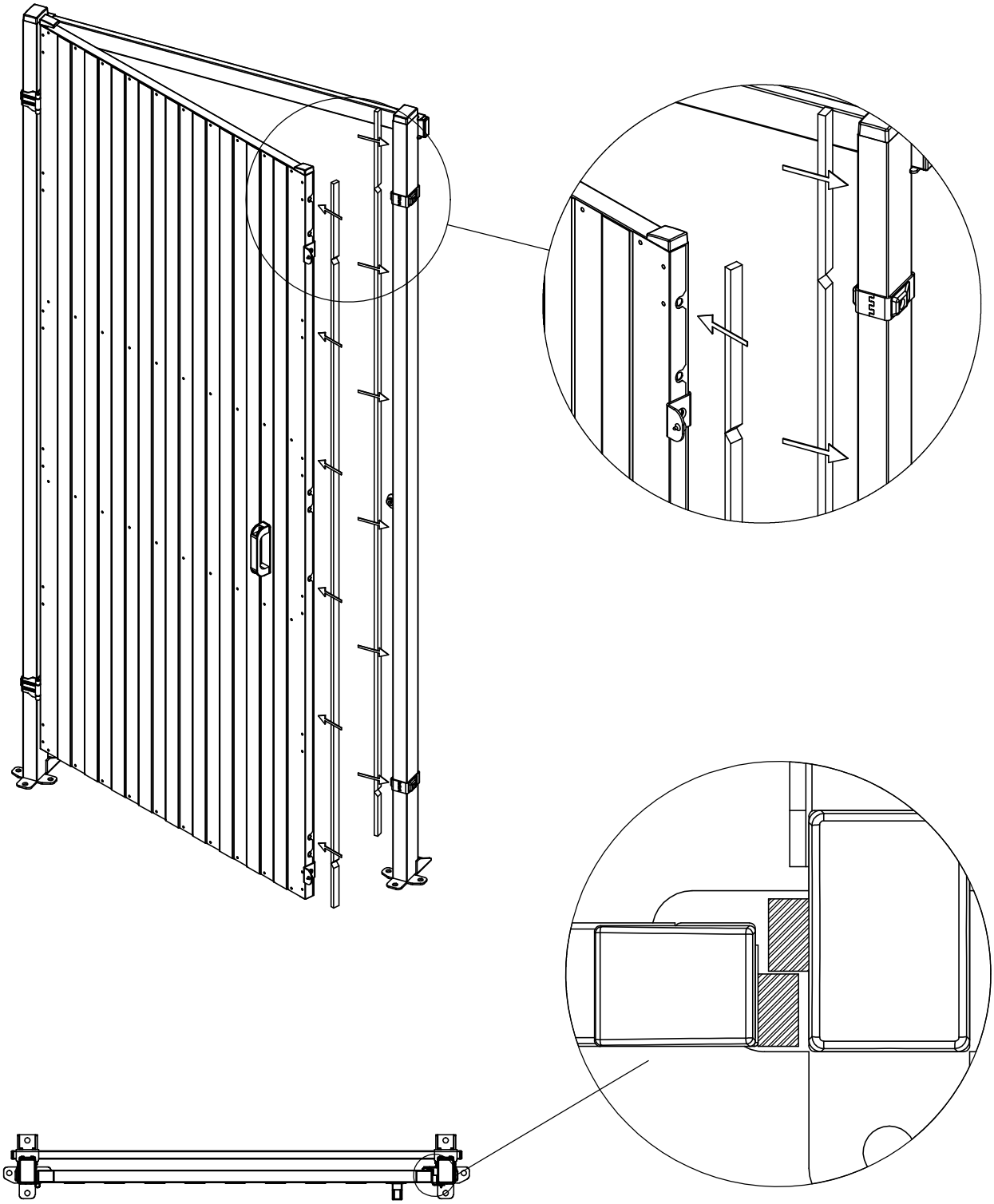

SmarTeam ID: 00048614

www.troax.com

88754513 0.1