ASSEMBLY INSTRUCTION
– JUST FOLLOW ME

SLIDING DOOR ON WHEELS

KIT 36907190

3D
INTERACTIVE
ASSEMBLY
INSTRUCTION

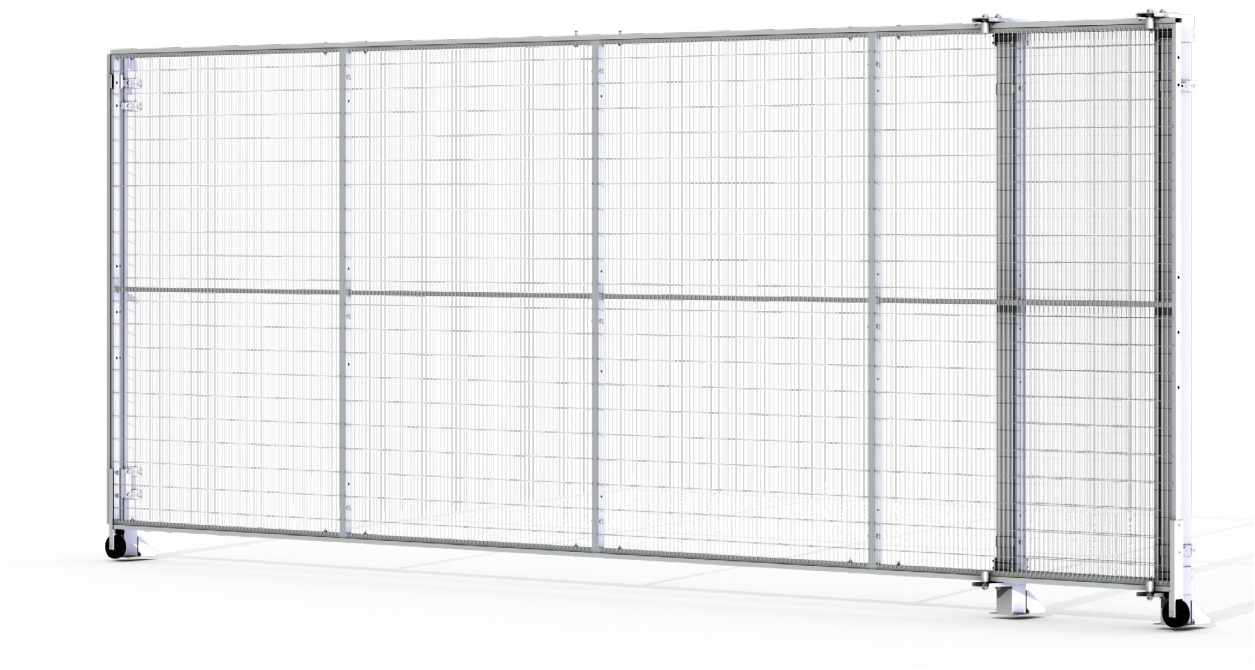

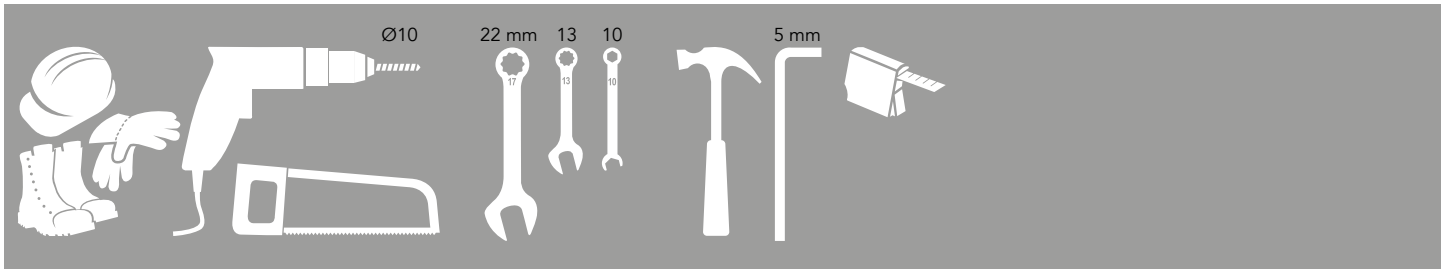

Kit Sliding door on wheels 36907190

Kit Sliding door on wheels 36907190

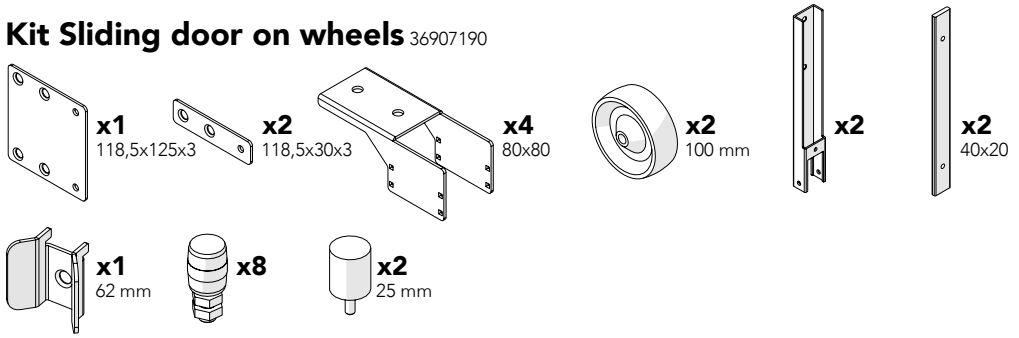

Bag for kit 7190-88697190

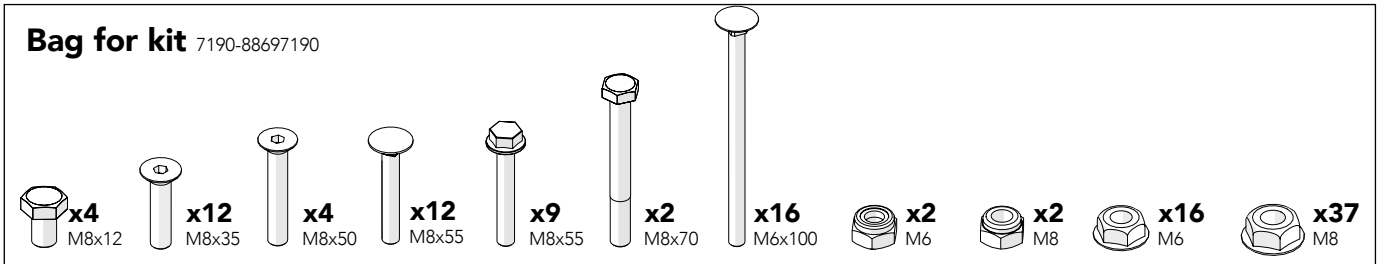

Kit Bracket SmF 36700074

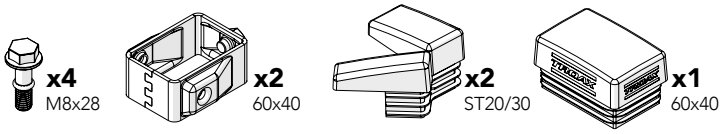

Kit Bracket Strong Fix 36700098

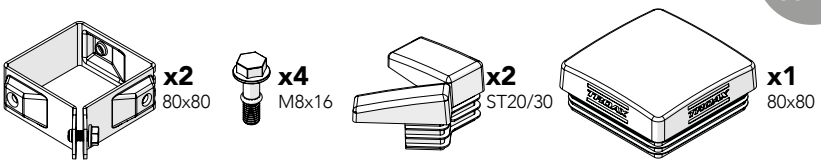

Troax sign 89200000

Art no: 88754549 ver. 007

Kit Bracket Strong Fix

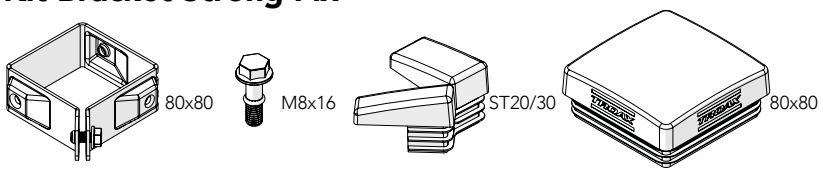

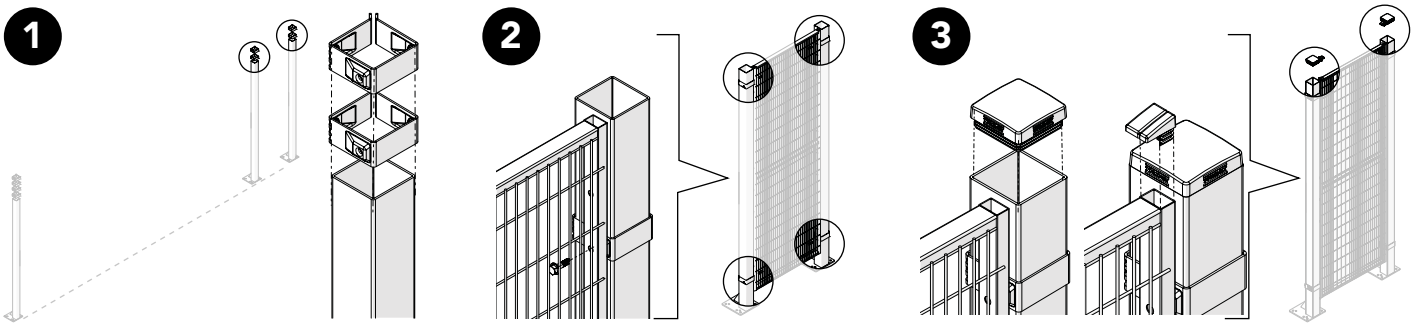

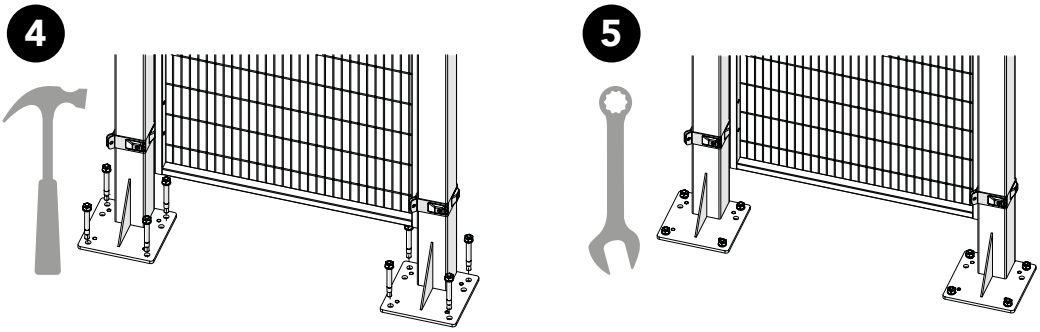

Kit Sliding door on wheels + Bag for kit

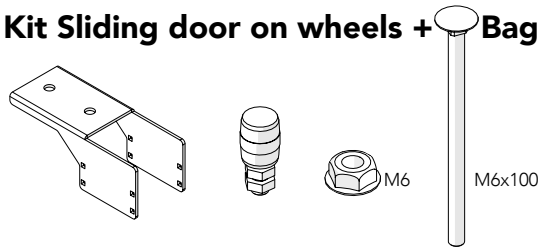

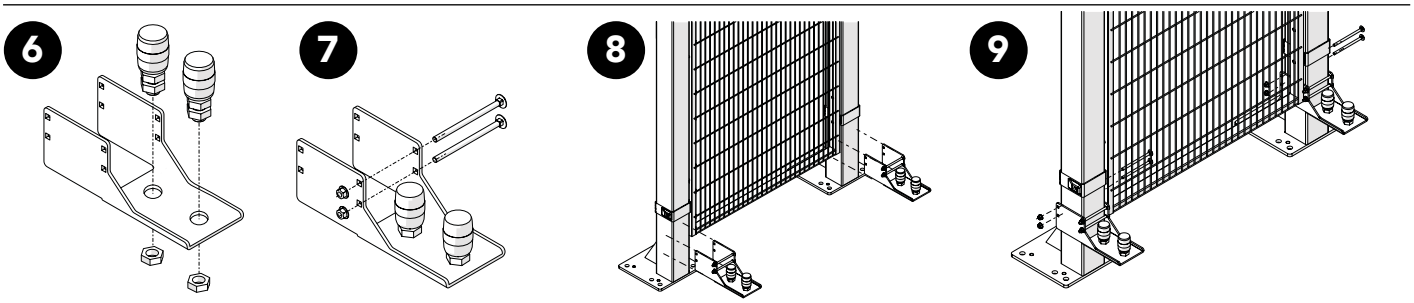

Art no: 88754549 ver. 007

Kit Sliding door on wheels + Bag for kit + Kit Bracket Strong Fix / Kit Bracket SmF

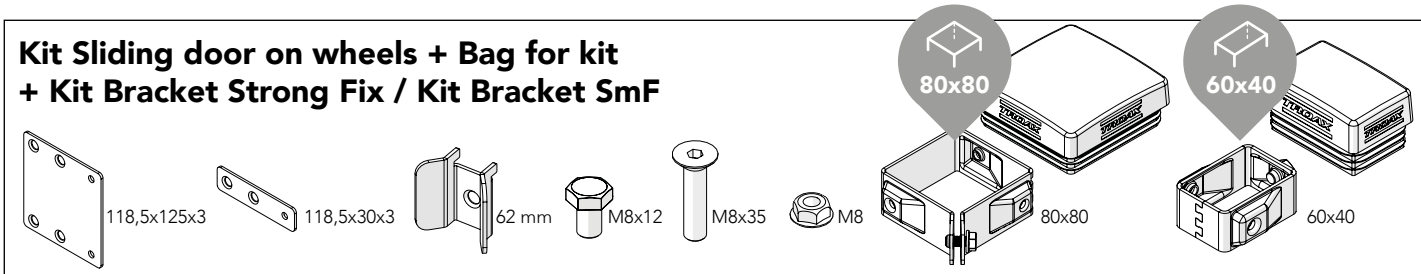

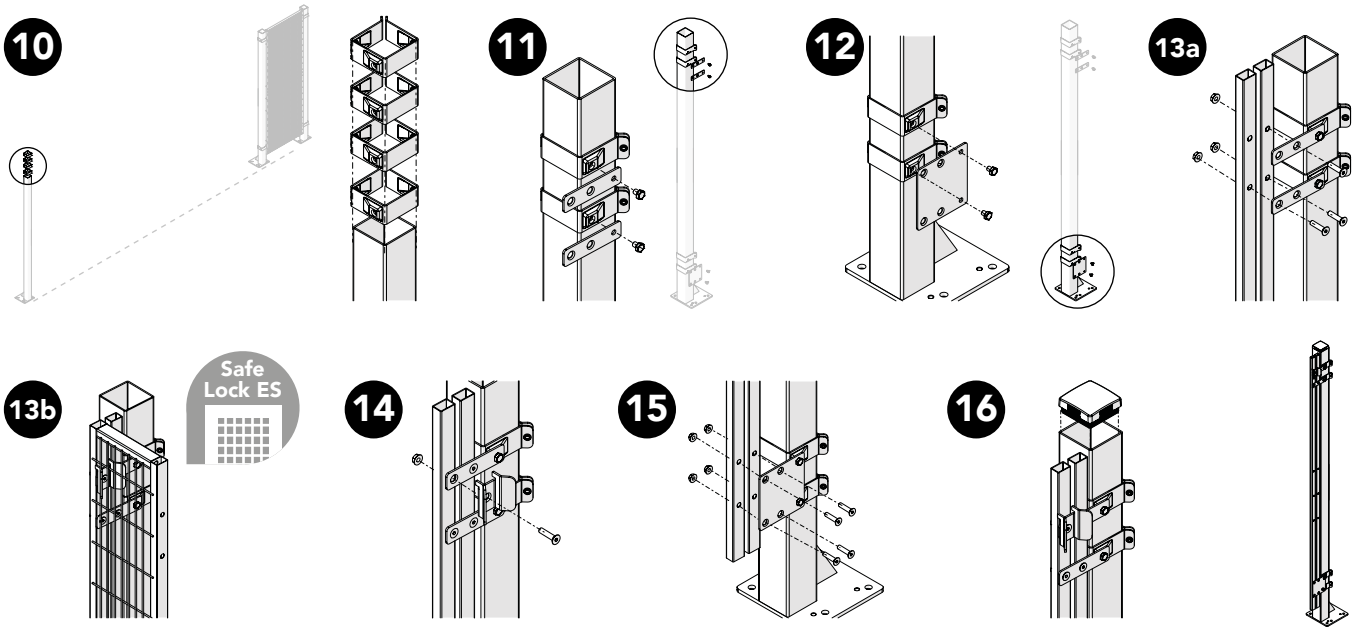

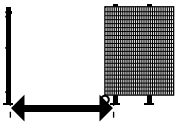

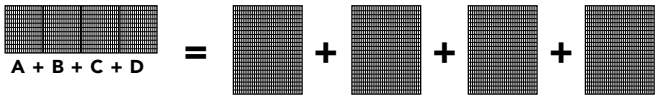

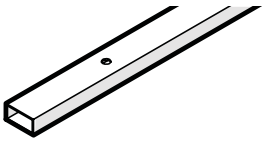

		A	B	C	D	
1100	2000 mm	1000	1000			2000
1500	2400 mm	1200	1200			2400
2100	3000 mm	1500	1500			3000
2300	**3200 mm**	1000	1000	1200		2000 + **1200** *(2400)*
2500	**3400 mm**	1200	1200	1000		2400 + **1000** *(2000)*
2600	**3500 mm**	1000	1000	1500		2000 + **1500** *(3000)*
3000	**3900 mm**	1200	1200	1500		2400 + **1500** *(3000)*
3100	4000 mm	1000	1000	1000	1000	2000 + 2000
3300	**4200 mm**	1500	1500	1200		3000 + **1200** *(2400)*
3500	4400 mm	1000	1000	1200	1200	2000 + 2400
3900	4800 mm	1200	1200	1200	1200	2400 + 2400
4100	5000 mm	1000	1000	1500	1500	2000 + 3000
4500	5400 mm	1200	1200	1500	1500	2400 + 3000
5100	6000 mm	1500	1500	1500	1500	3000 + 3000

Art no: 88754549 ver. 007

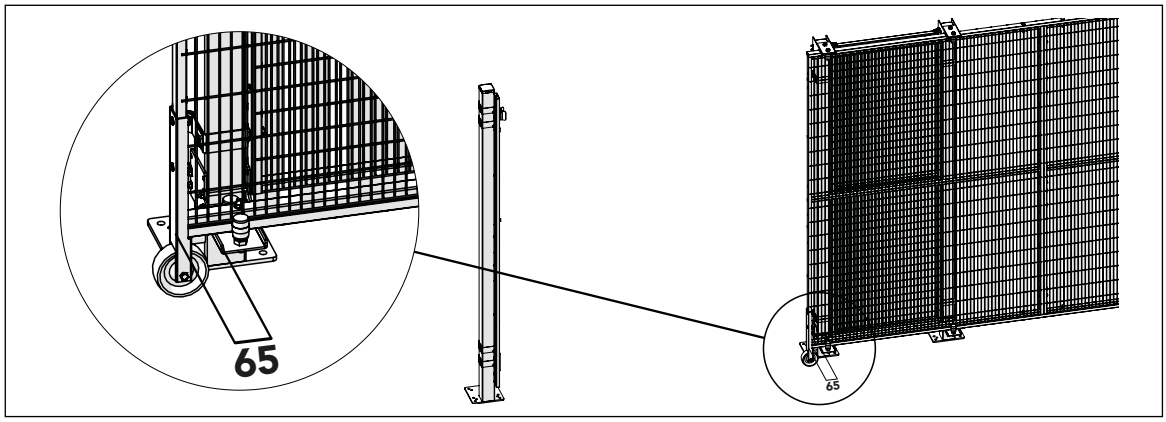

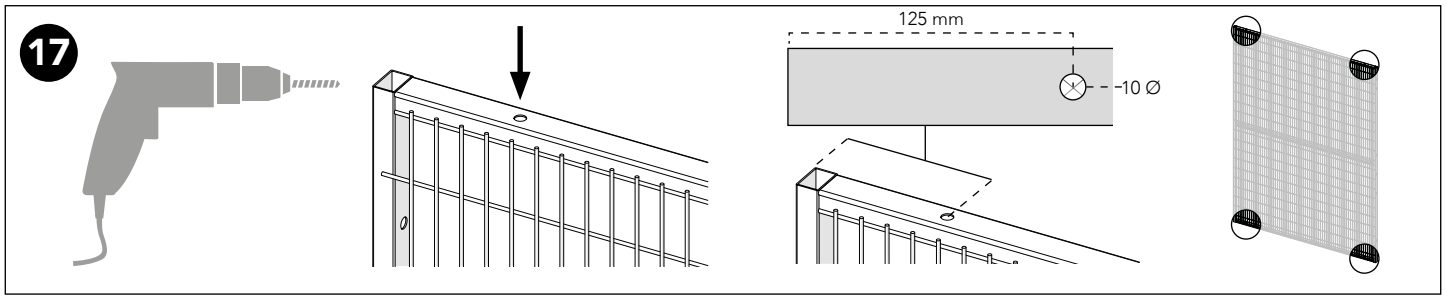

Bag for kit

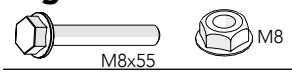

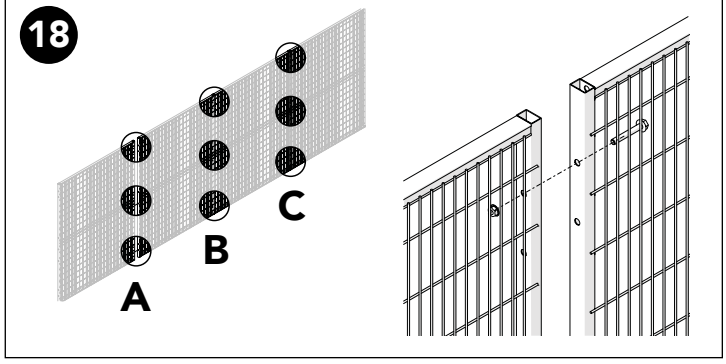

Bag for kit

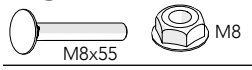

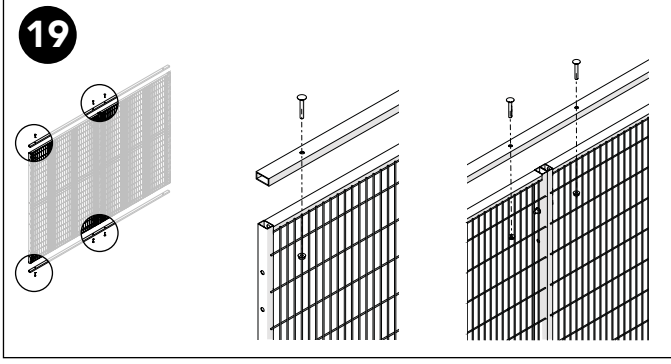

Bag for kit
+ Kit Sliding door on wheels

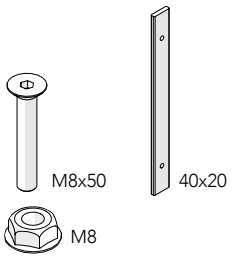

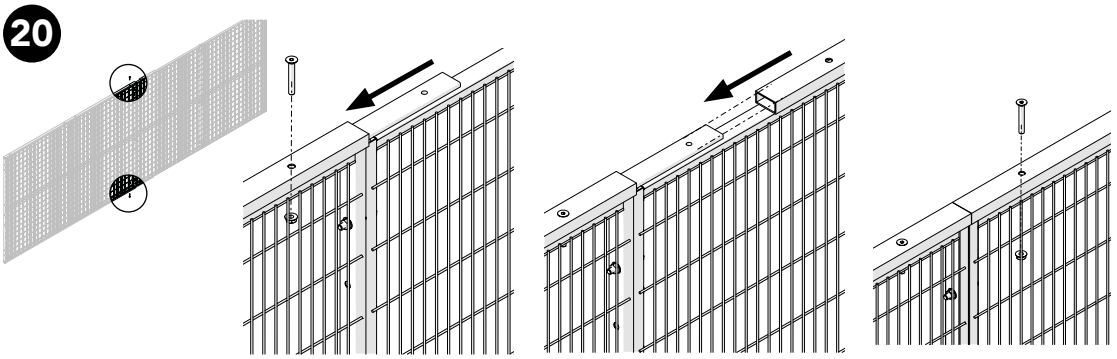

Bag for kit

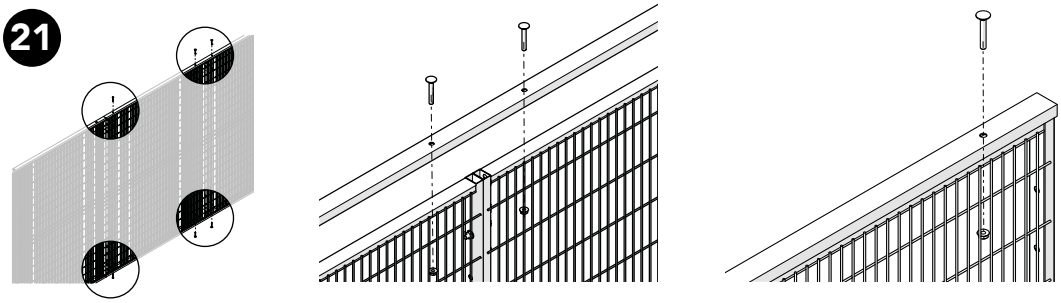

Art no: 88754549 ver. 007

Bag for kit + Kit Sliding door on wheels

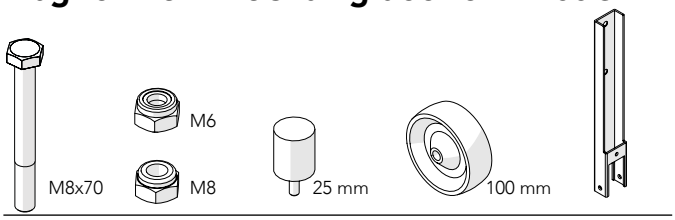

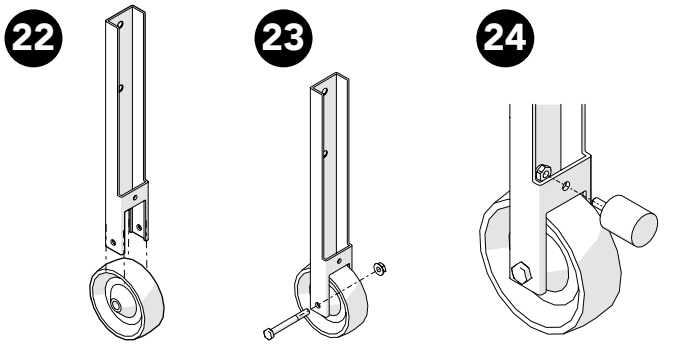

Bag for kit

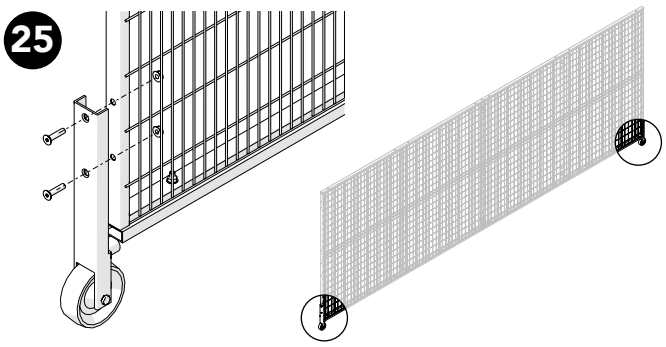

Bag for kit + Kit Sliding door on wheels

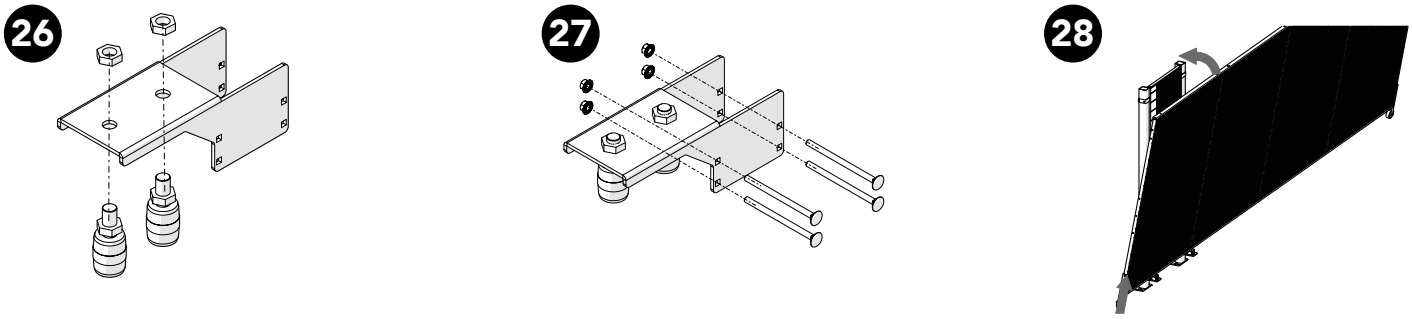

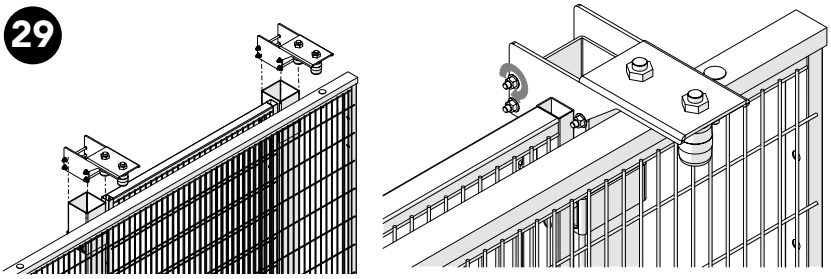

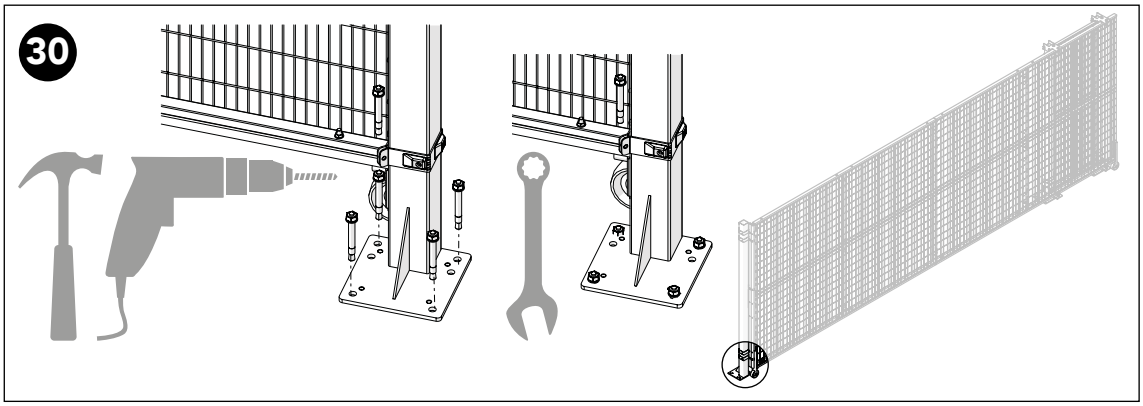

31 Troax sign

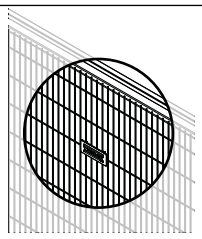

Art no: 88754549 ver. 007