ASSEMBLY INSTRUCTION
– JUST FOLLOW ME

# ANTI COLLAPSE SYSTEM ULTIMA BRACKET

**3D**
INTERACTIVE
ASSEMBLY
INSTRUCTION

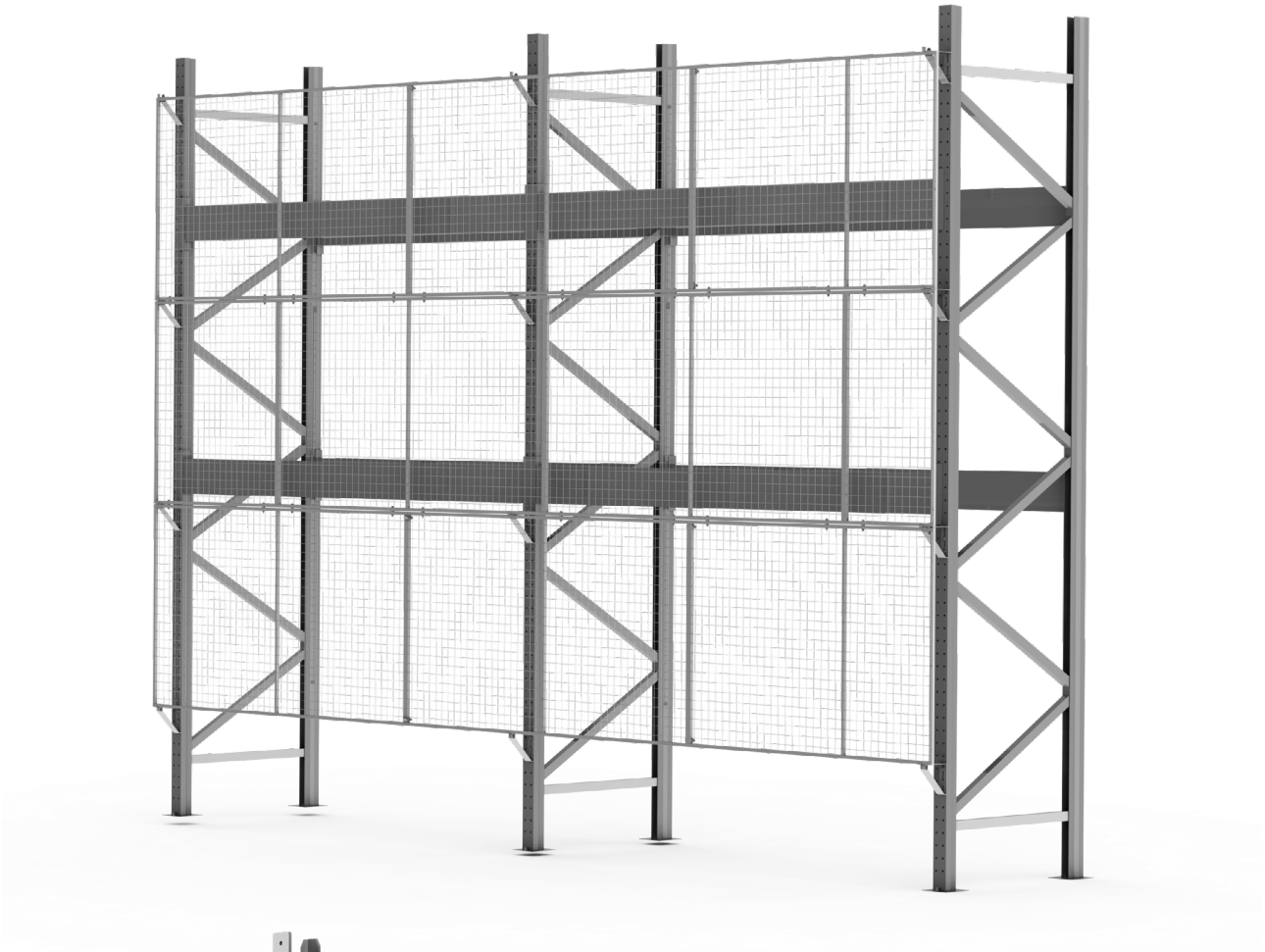

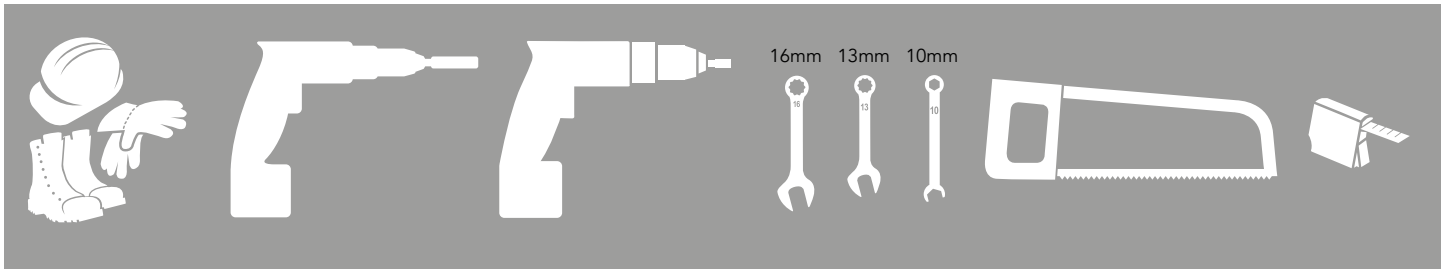


# Anti-Collapse System Ultima Bracket

## Kit ACL M8 35700199

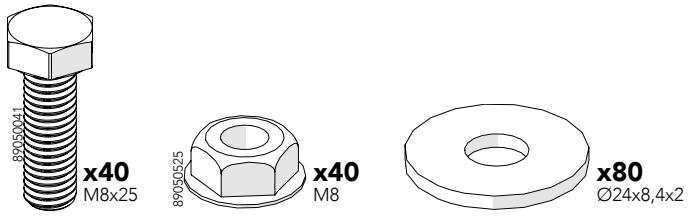


## Kit Ultima 35700289

## Kit ACL M10 35700209

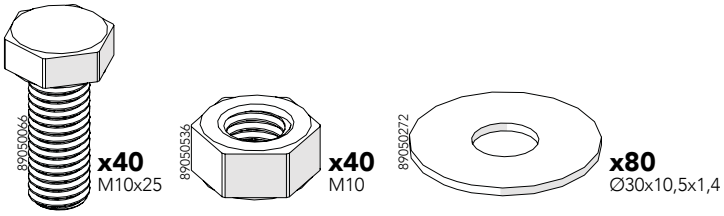


## Kit clamp ACL 35700299

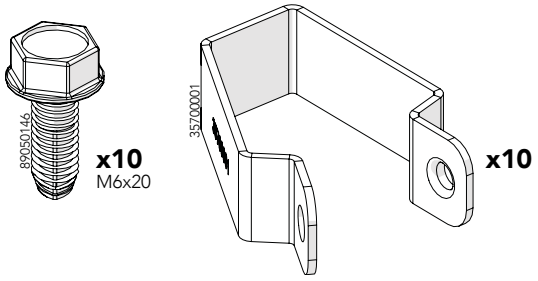


## Kit ACL panel 35700279

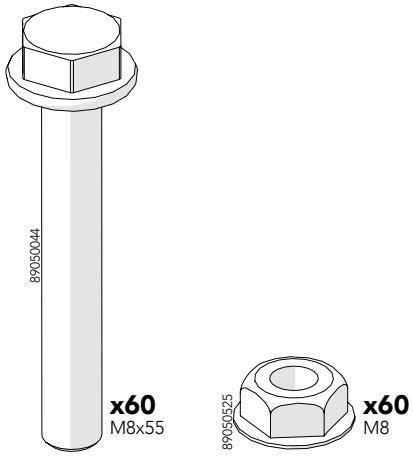


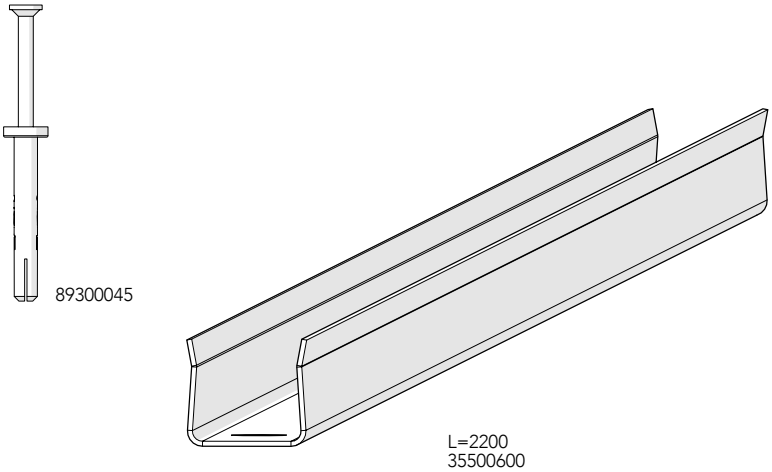


## Kit Self Drilling Screw 20500300

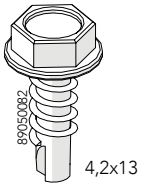


**Art no:** 88754239 ver. 003

## Kit ACL M8

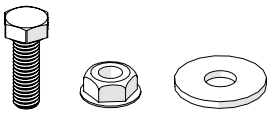


## Kit ACL M10

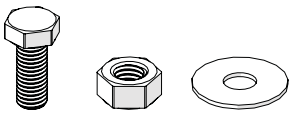


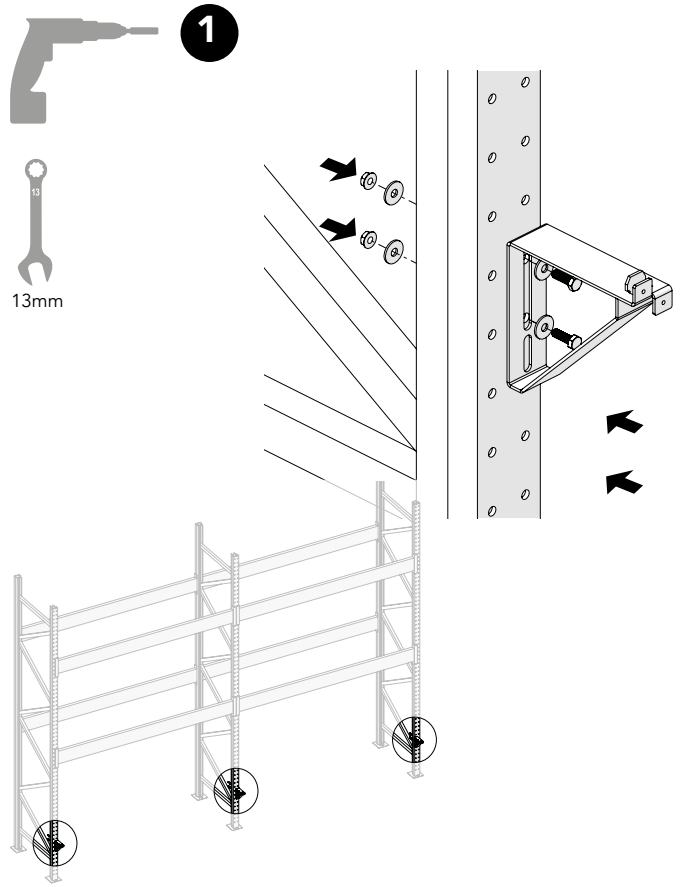


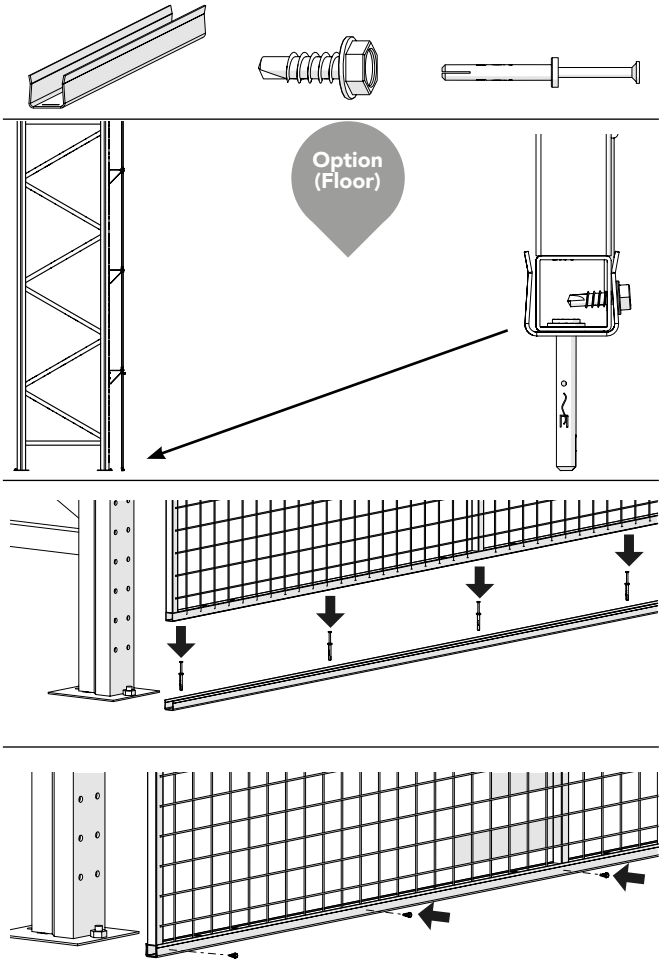


## Kit clamp ACL

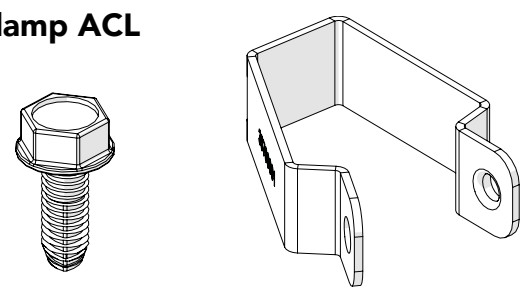

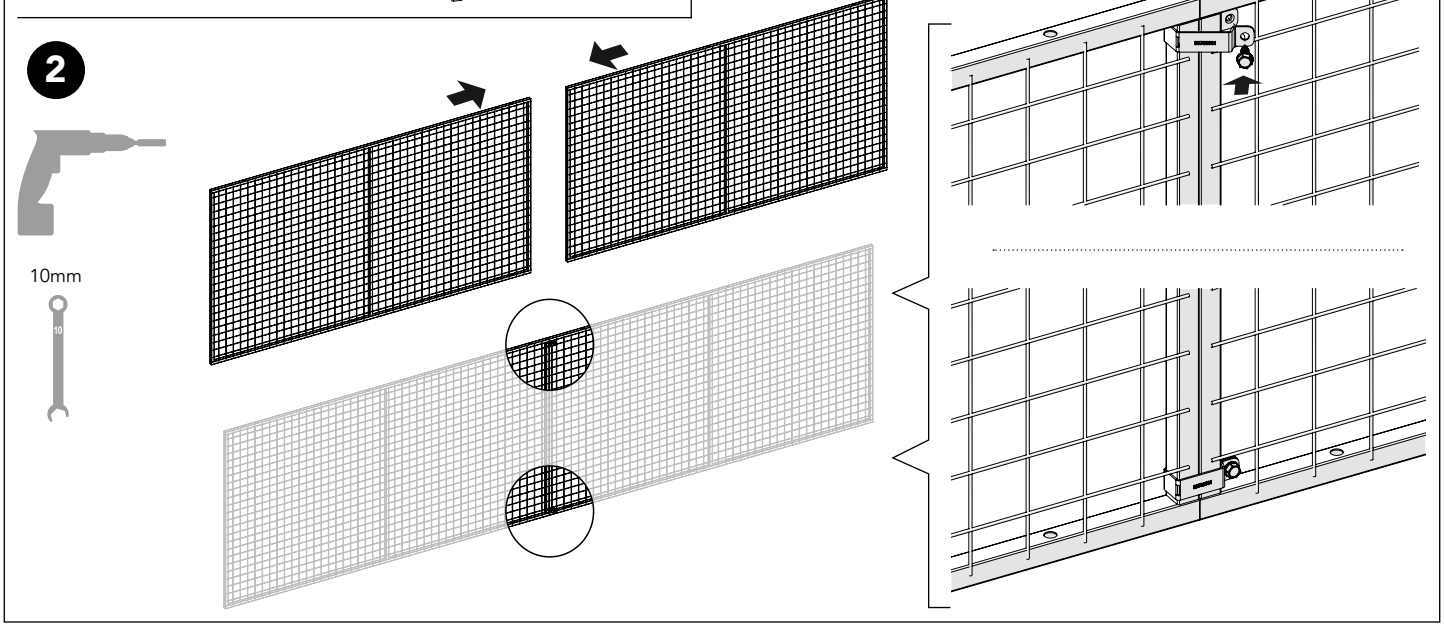


**Art no:** 88754239 ver. 003

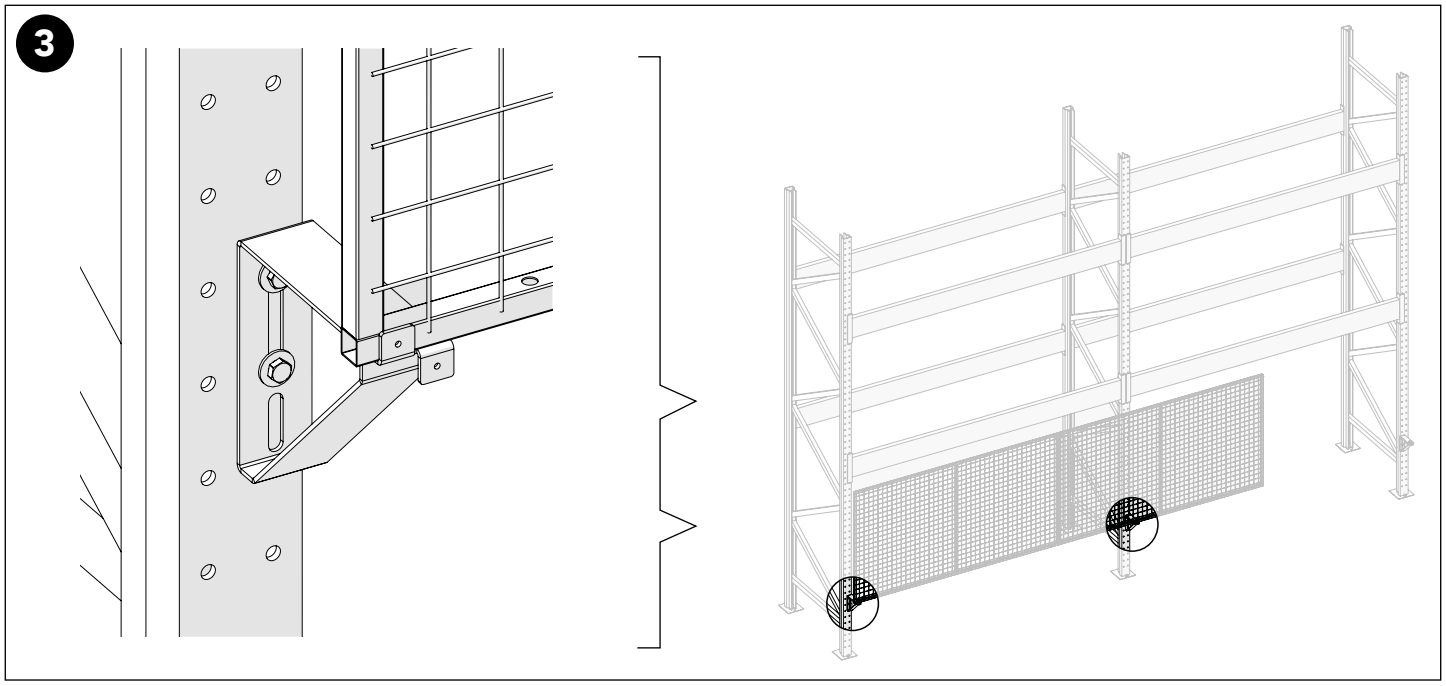


## Kit clamp ACL

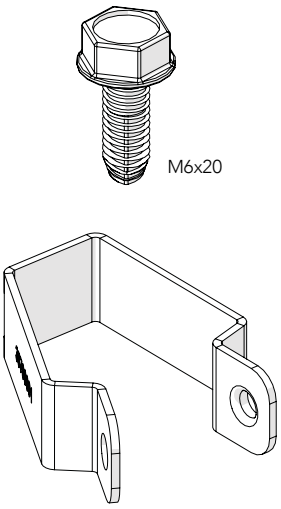


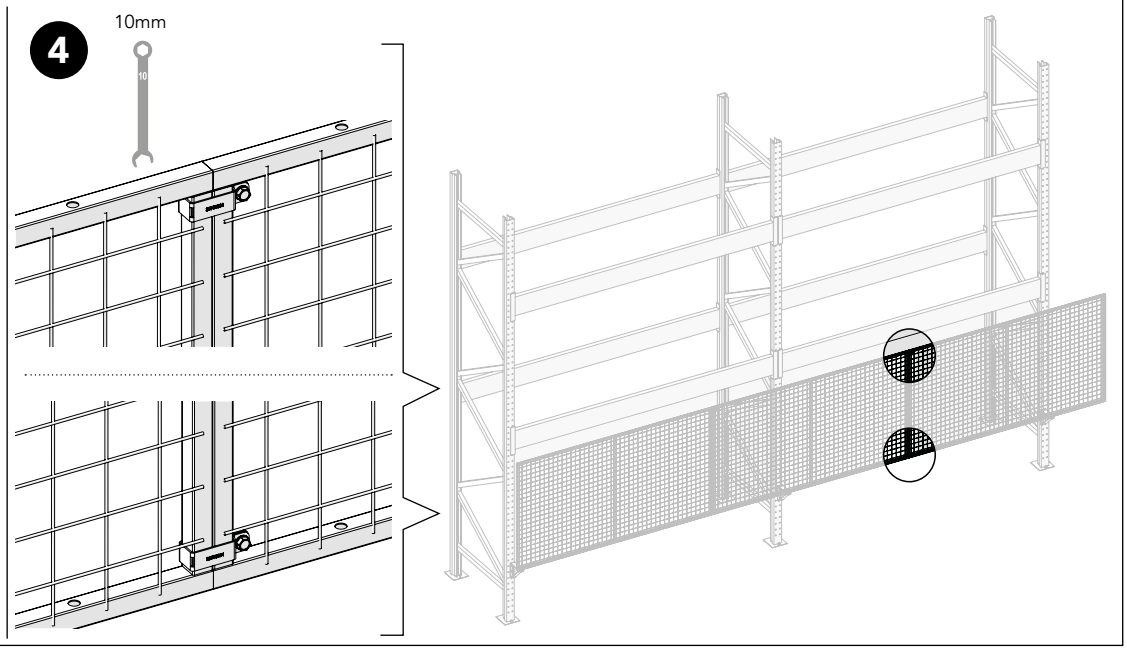


## Kit ACL M8

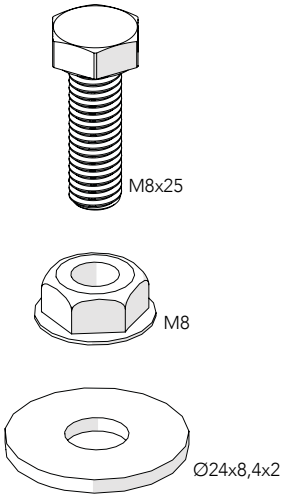


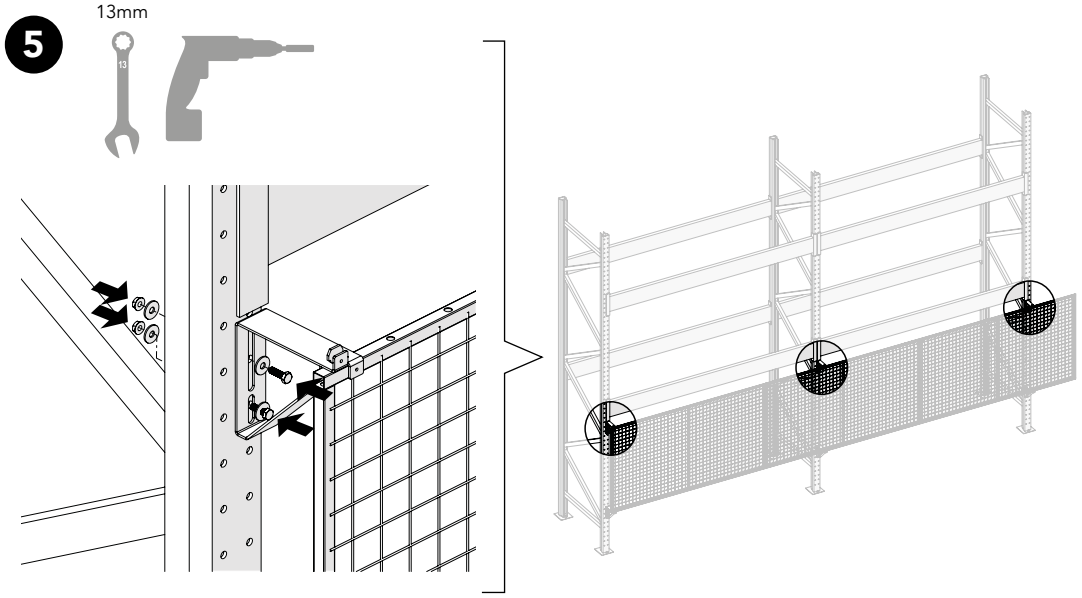


**Art no:** 88754239 ver. 003

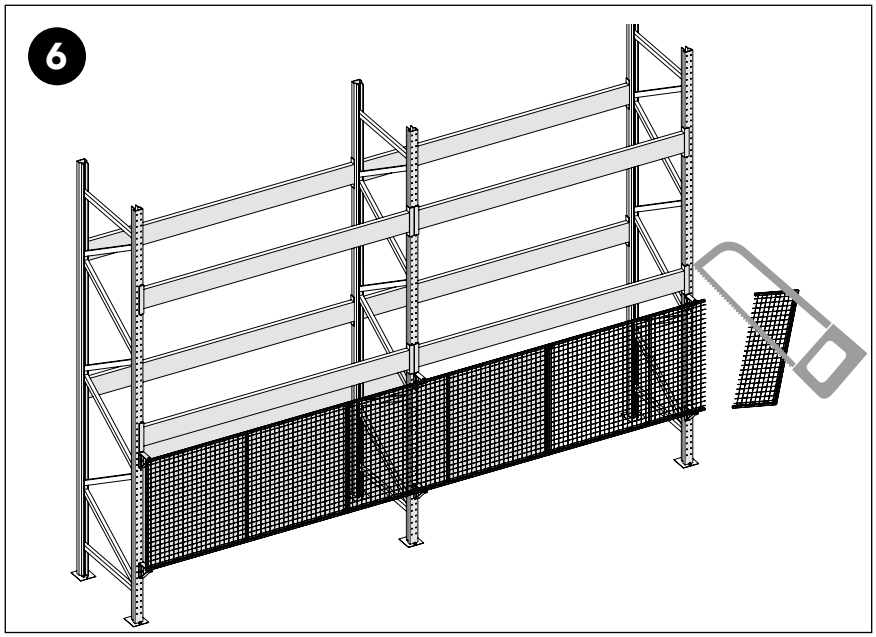


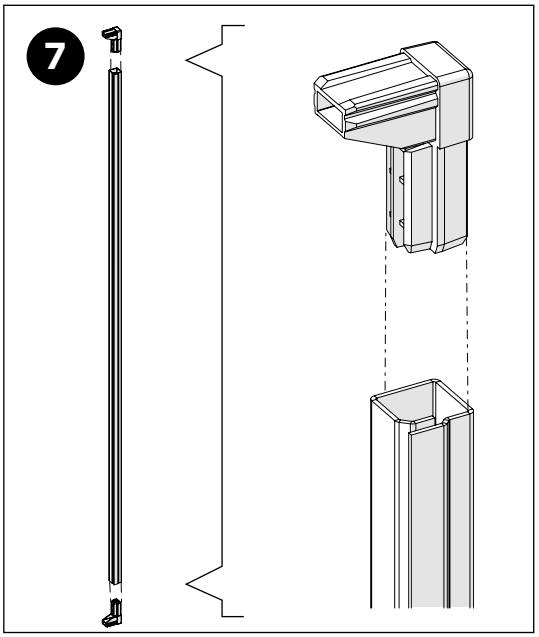


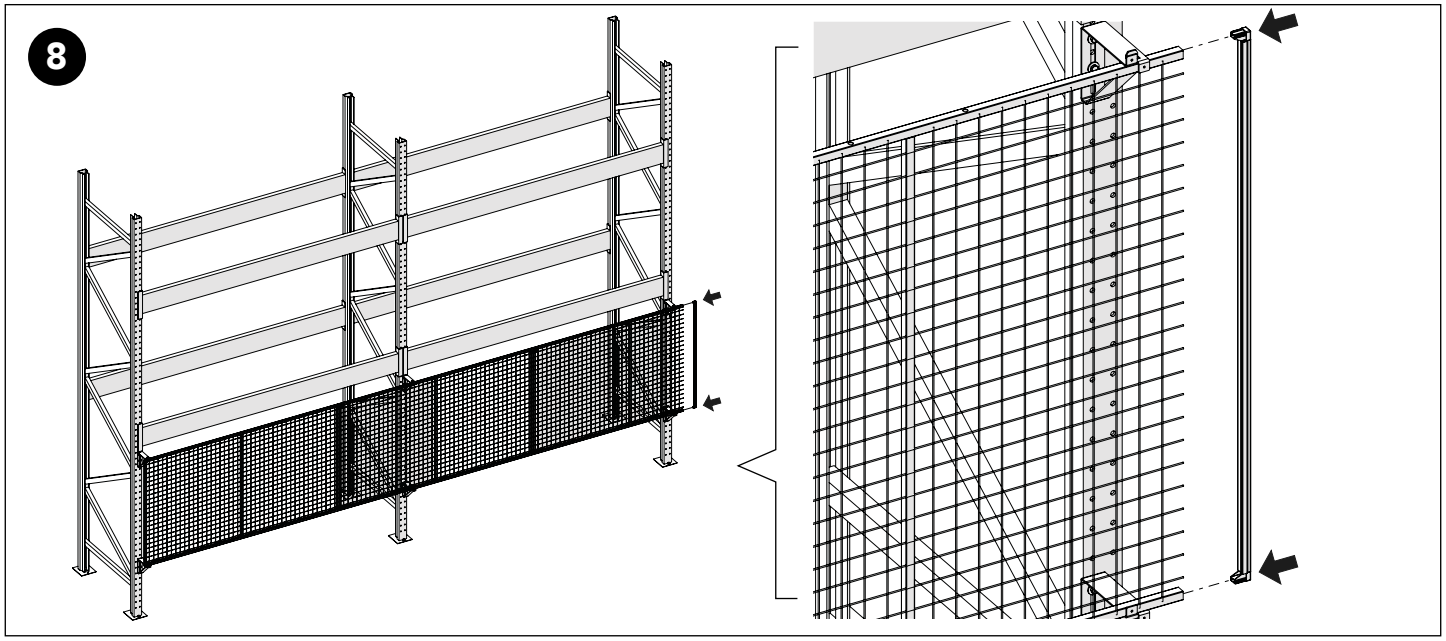


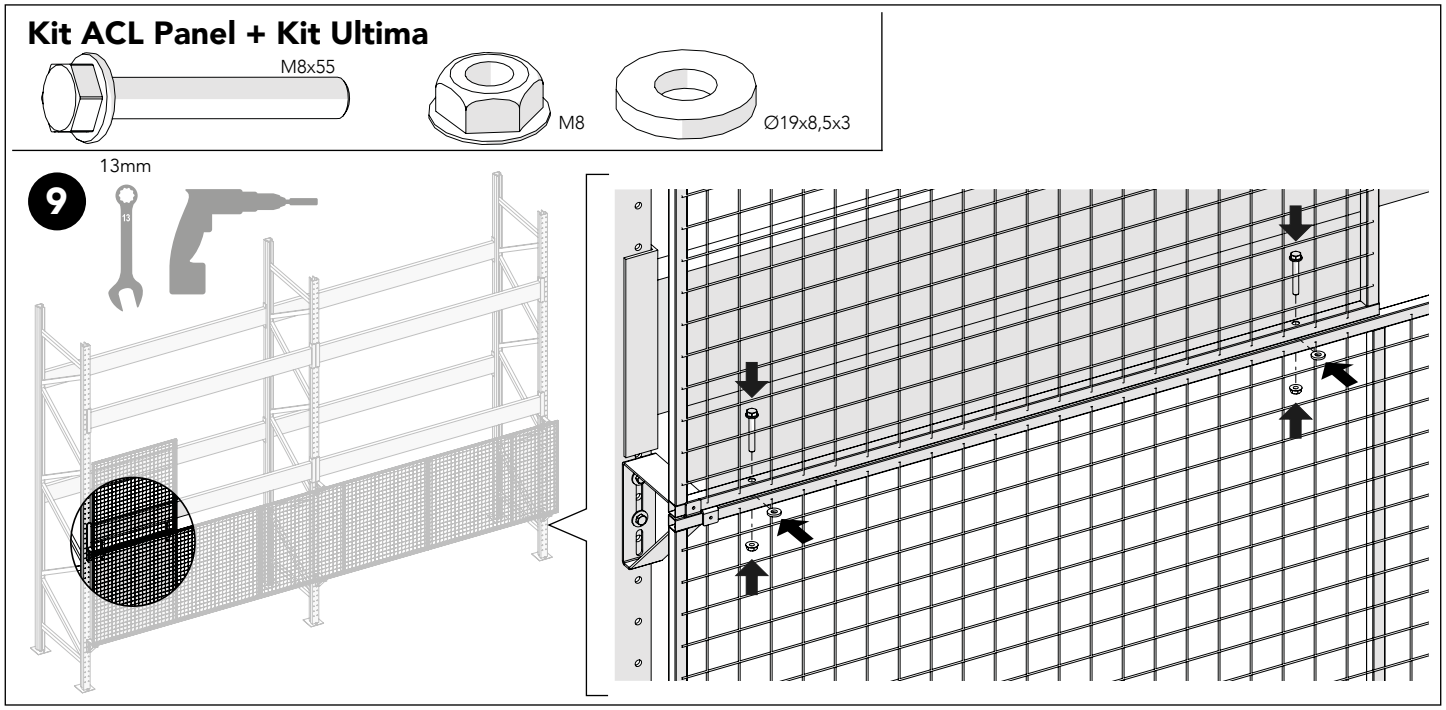


**Art no:** 88754239 ver. 003

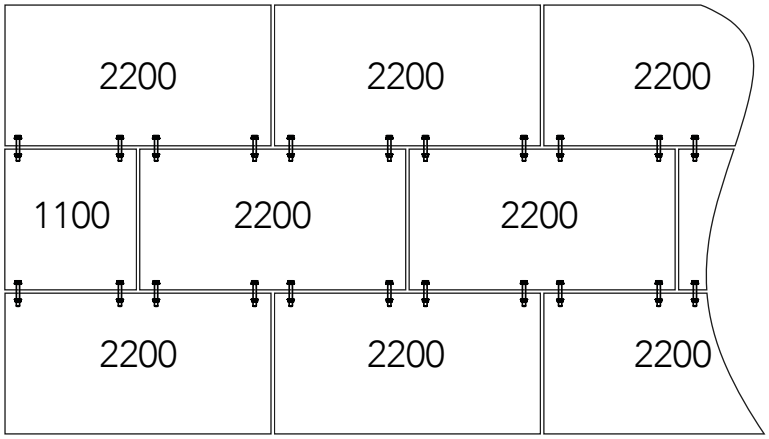


## Kit ACL Panel + Kit Ultima

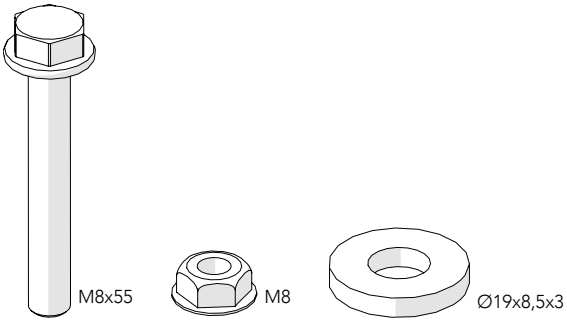


**10**

13mm

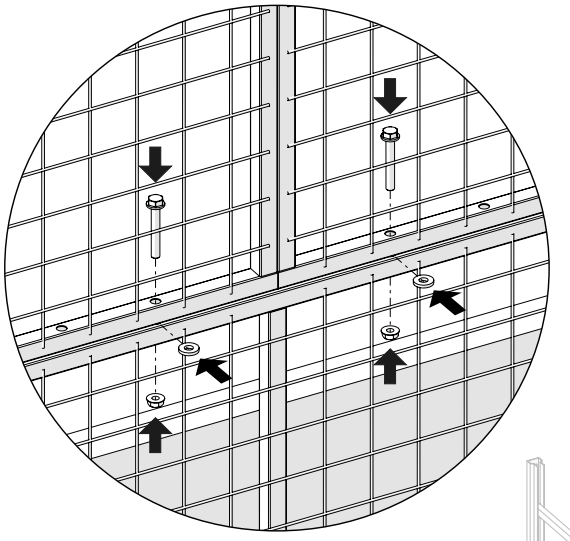

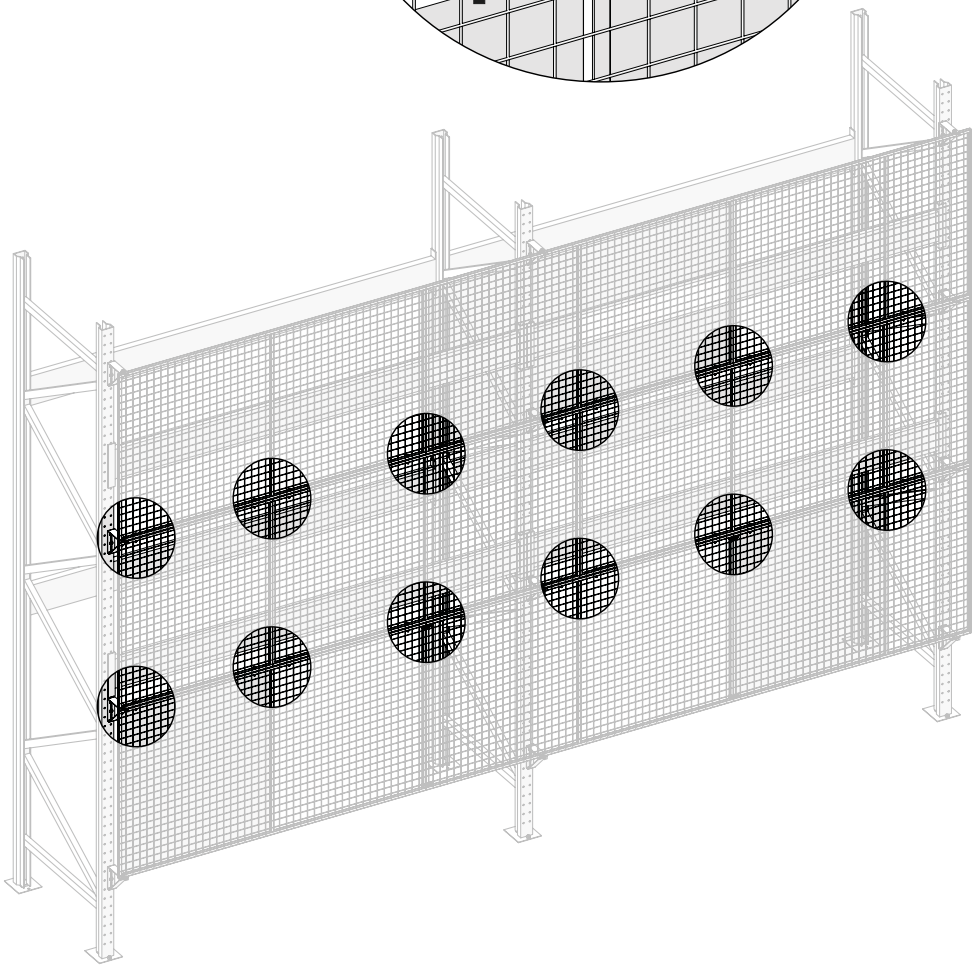

**Art no:** 88754239 ver. 003

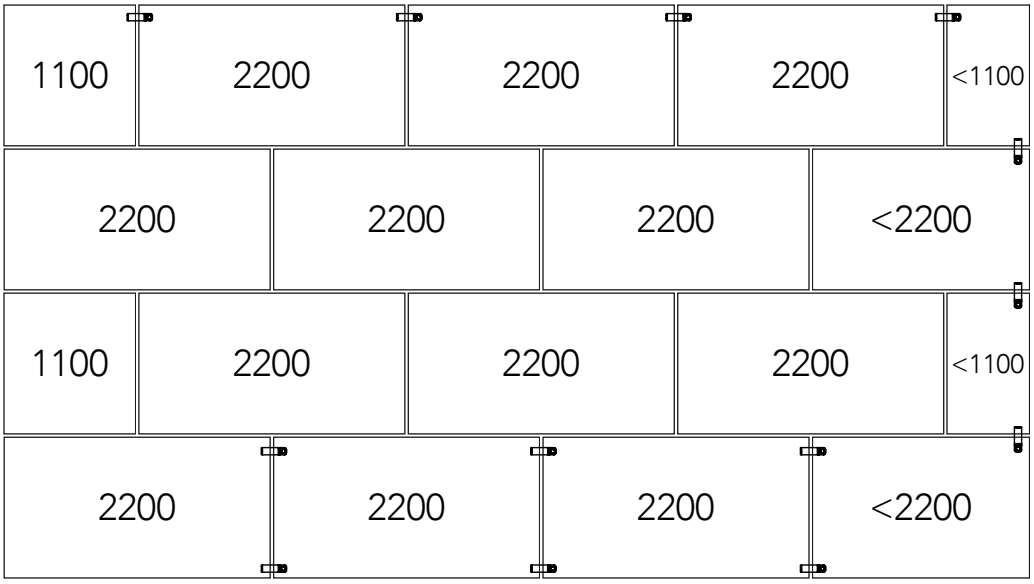


## Kit clamp ACL

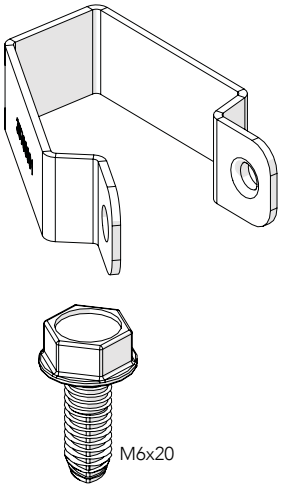


**11**

10mm

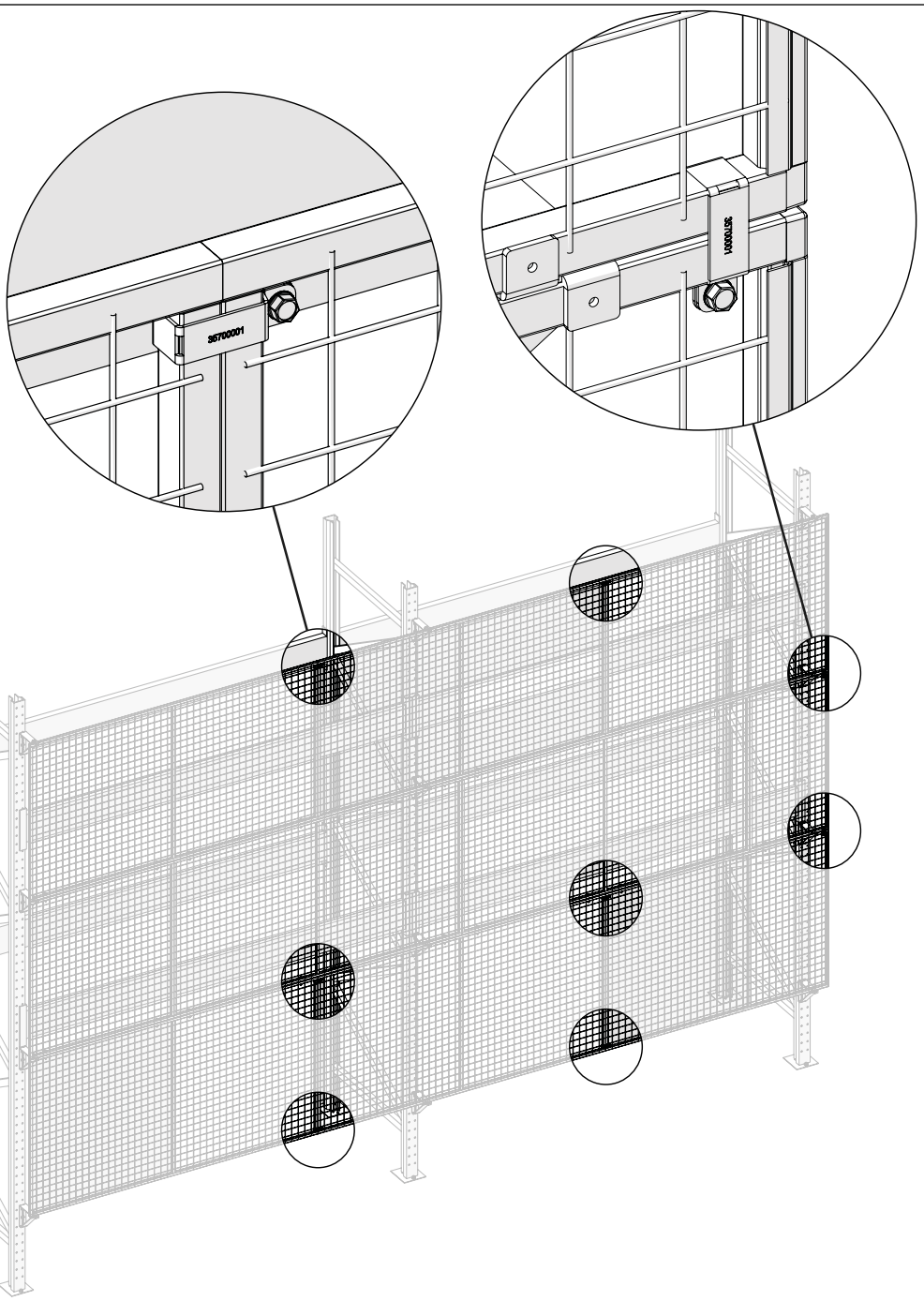


**Art no:** 88754239 ver. 003

## Kit Self Drilling Screw

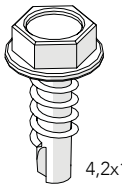


12

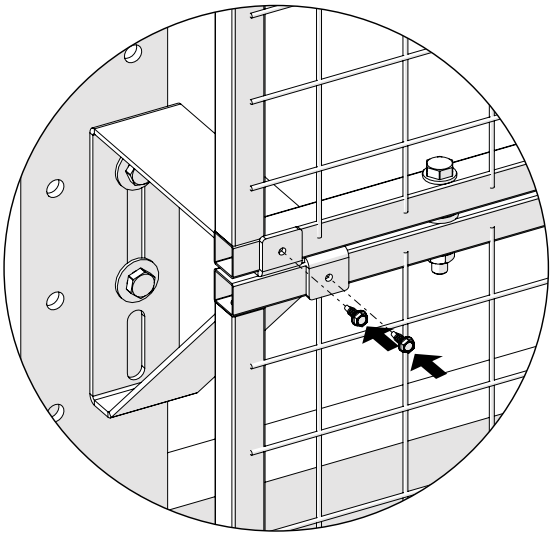

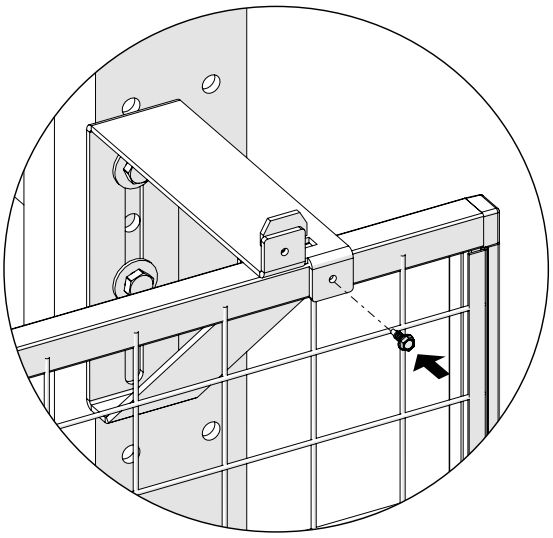

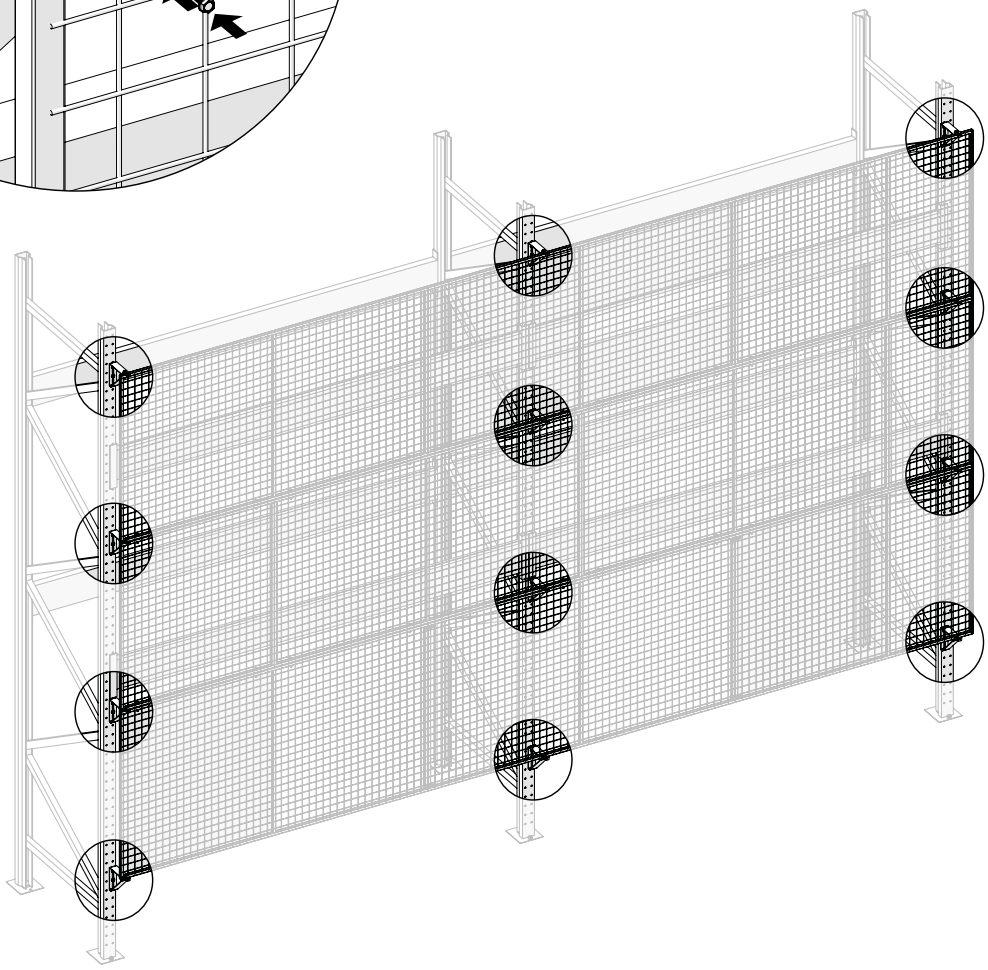

**Art no:** 88754239 ver. 003