ASSEMBLY INSTRUCTION
– JUST FOLLOW ME

PARTITIONING SYSTEM UR350/UX450

3D
INTERACTIVE
ASSEMBLY
INSTRUCTION

KIT 26700049

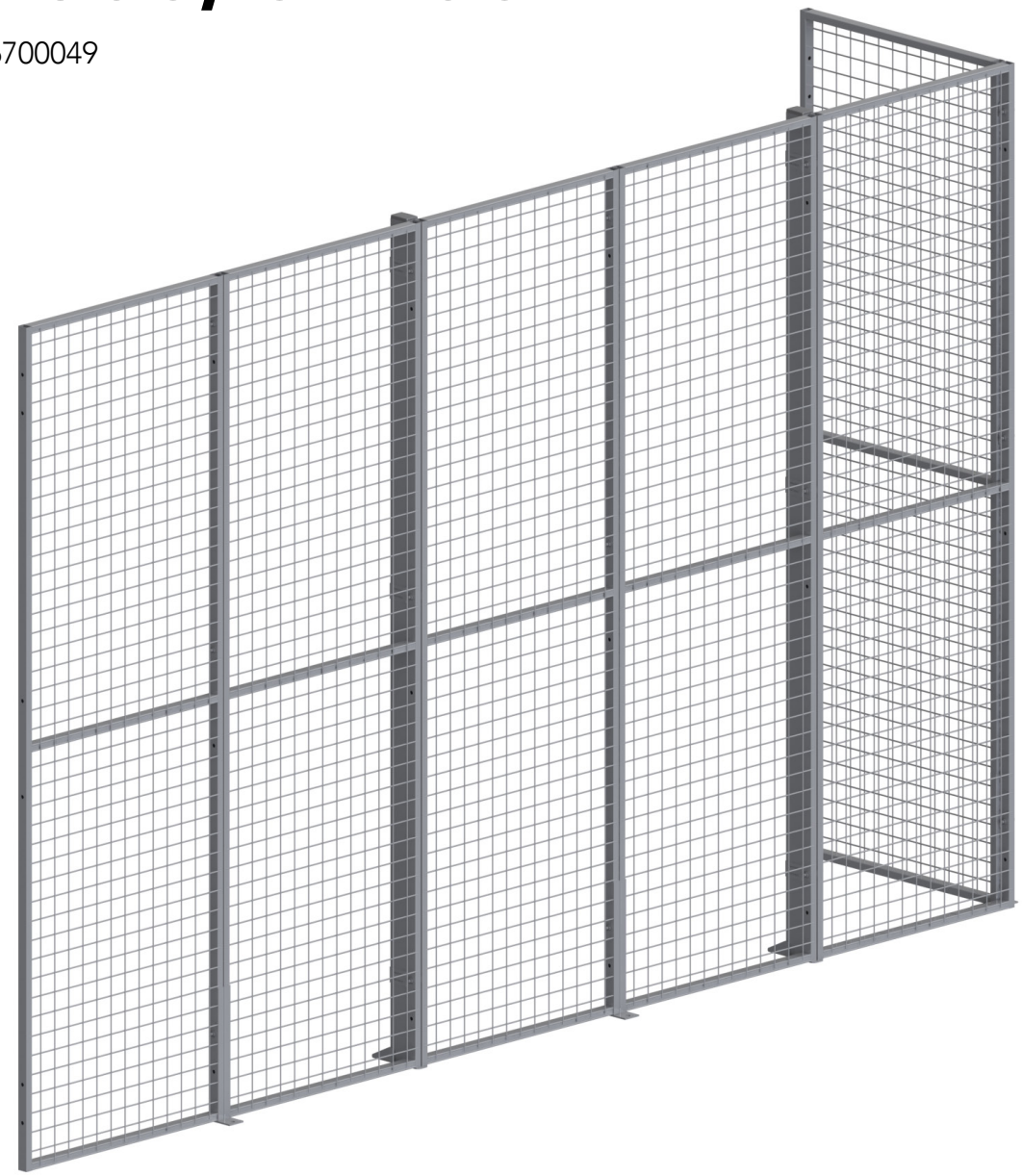

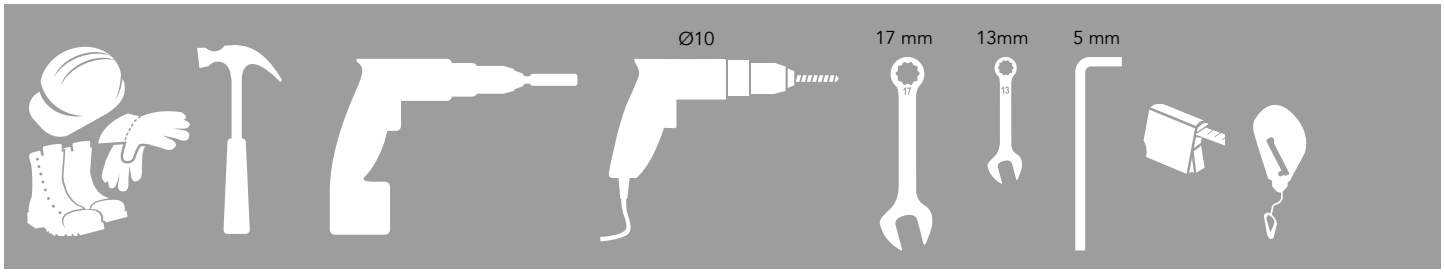

Partitioning System

Kit Corner Bracket 26700049

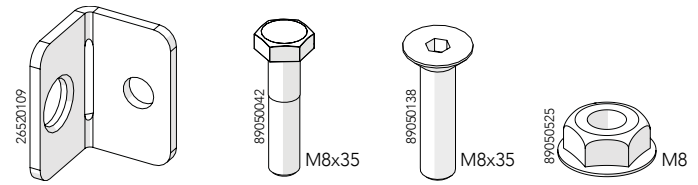

Expander 89050090

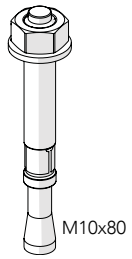

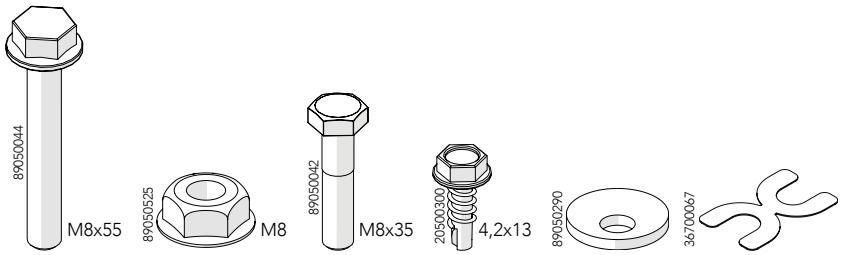

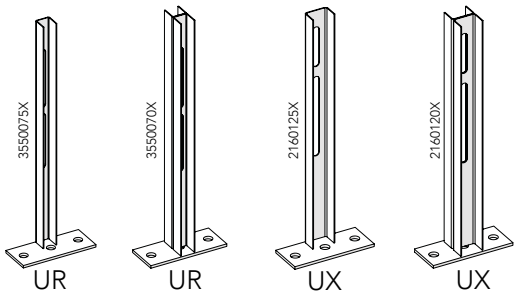

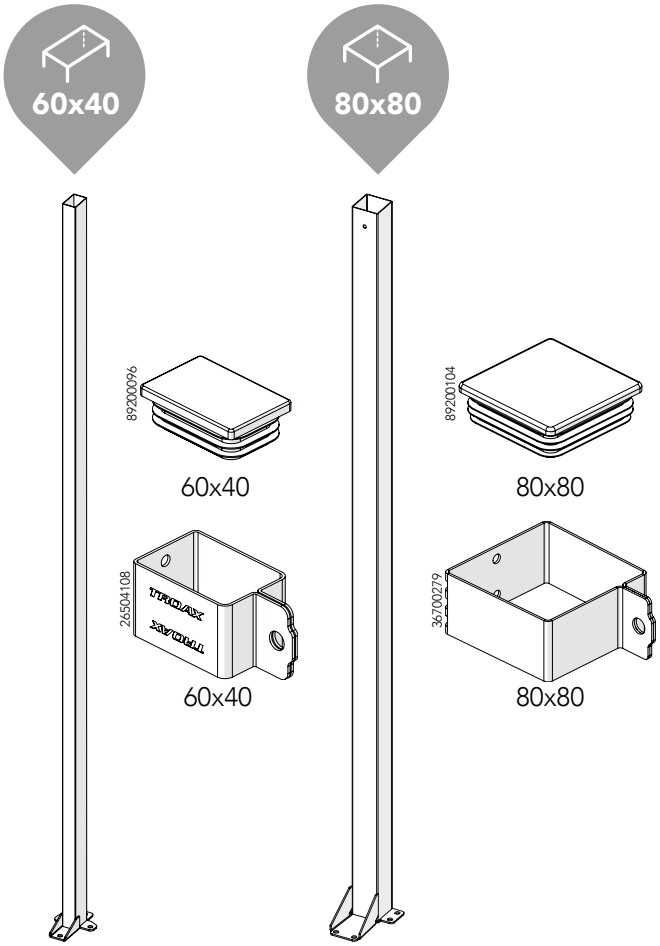

Art no: 88754742 ver. 004

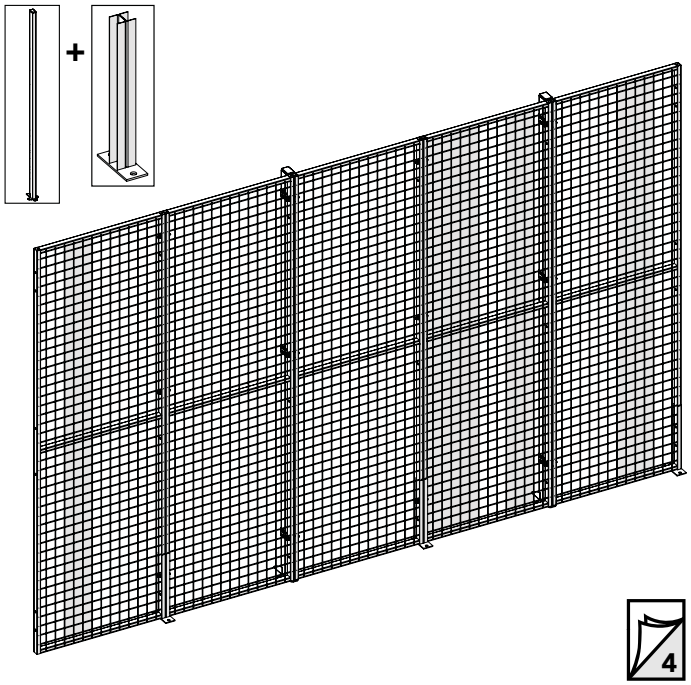

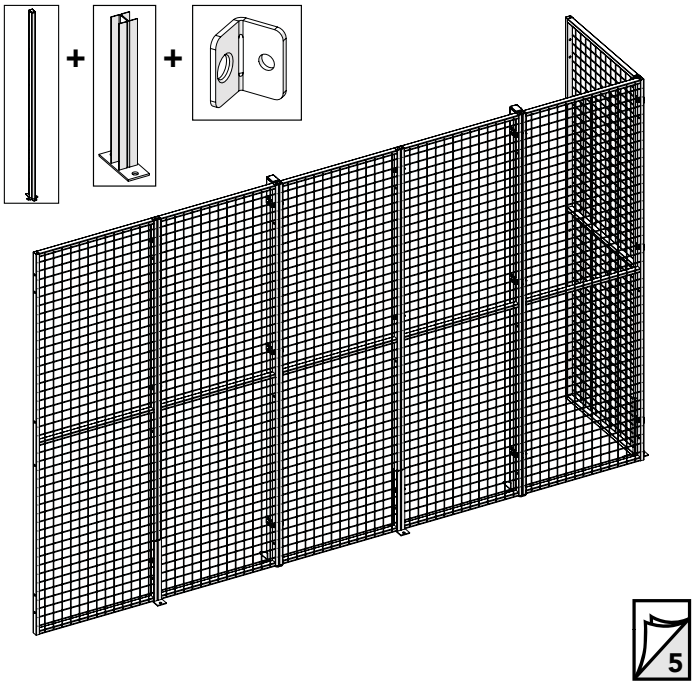

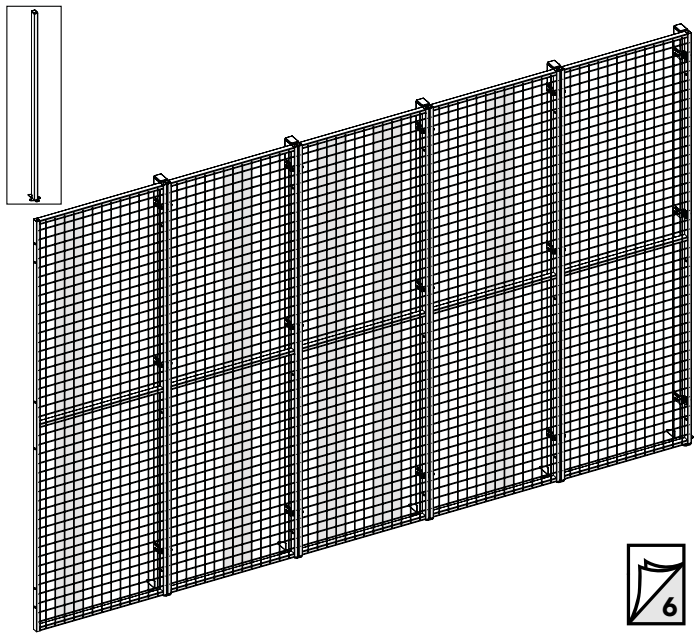

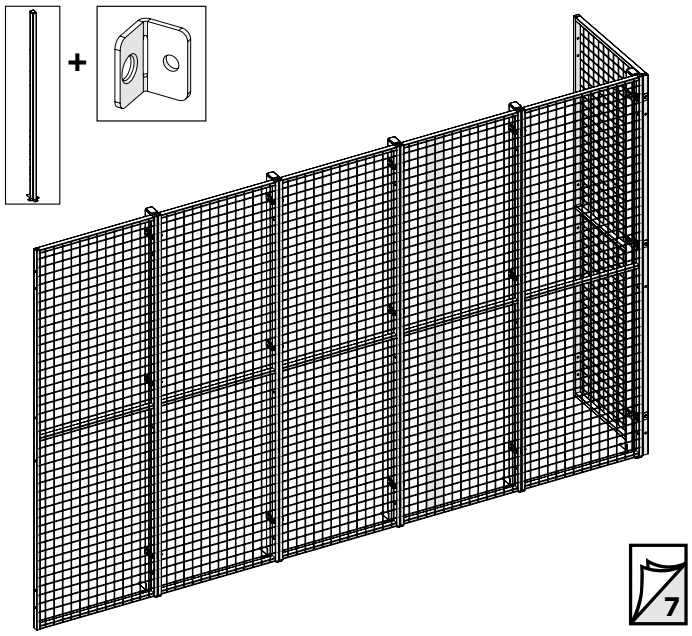

Expander

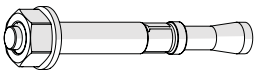

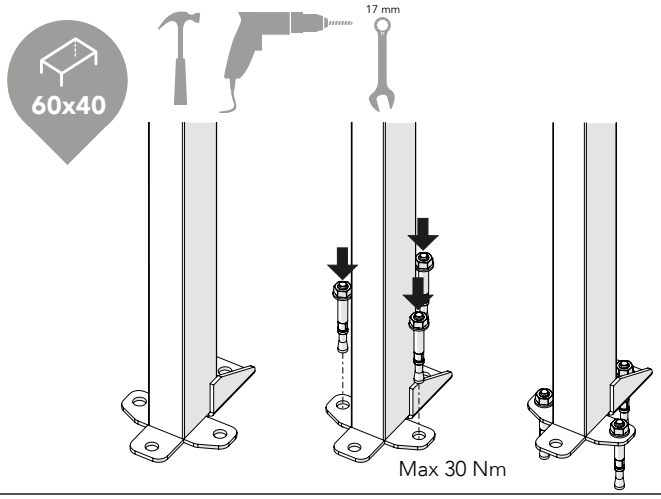

Bolt + Shims

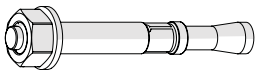

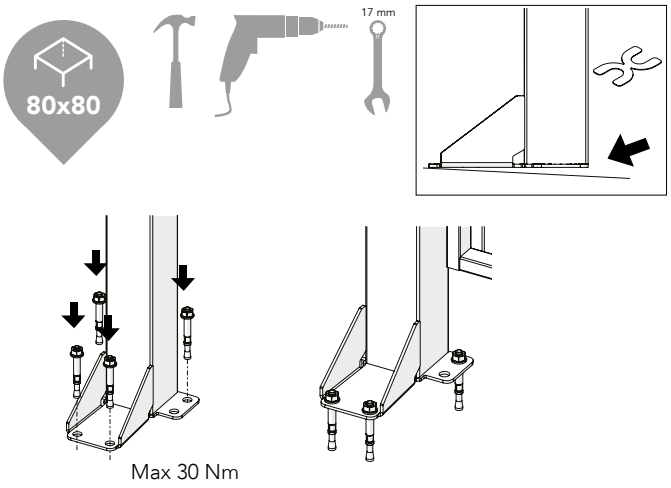

Art no: 88754742 ver. 004

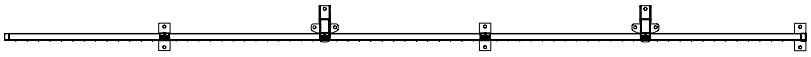

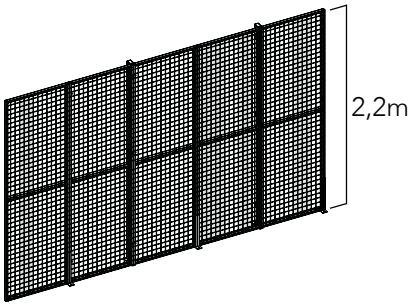

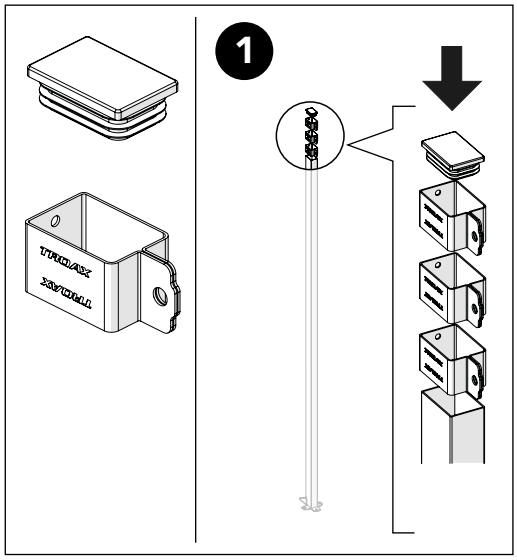

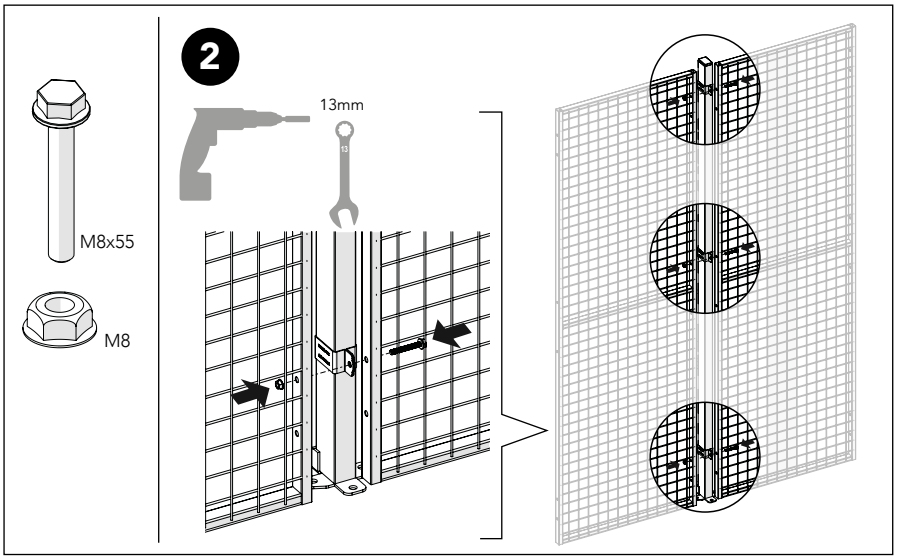

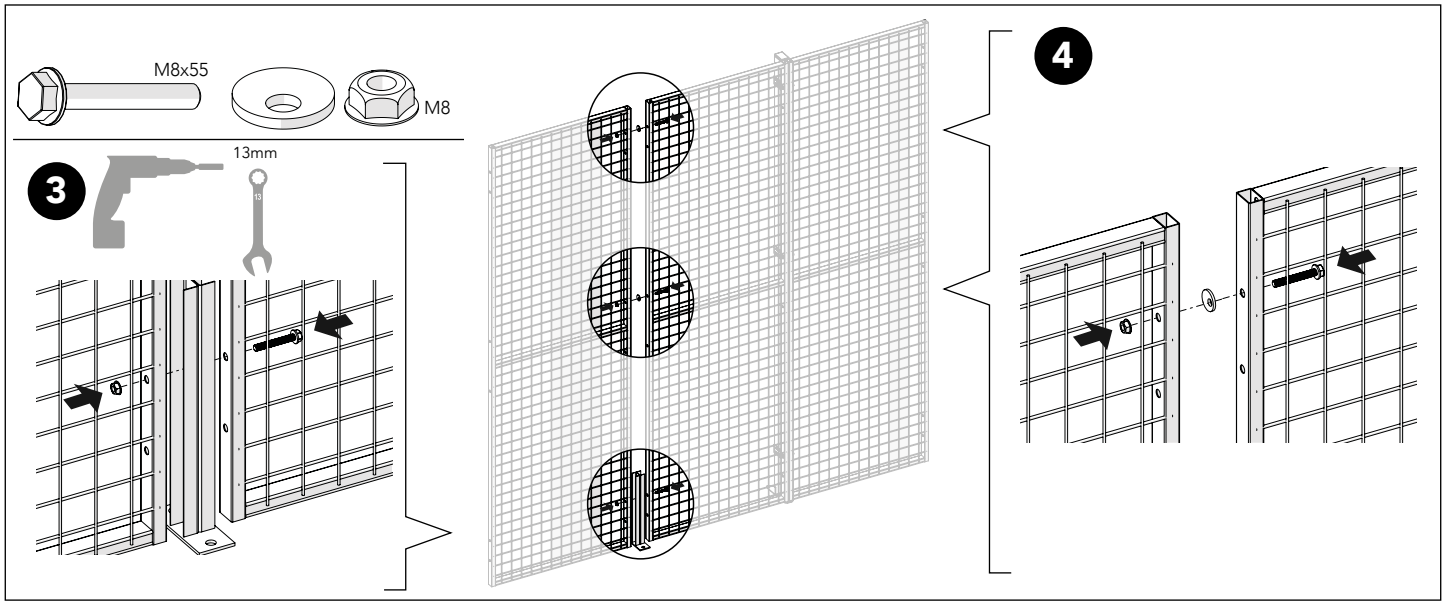

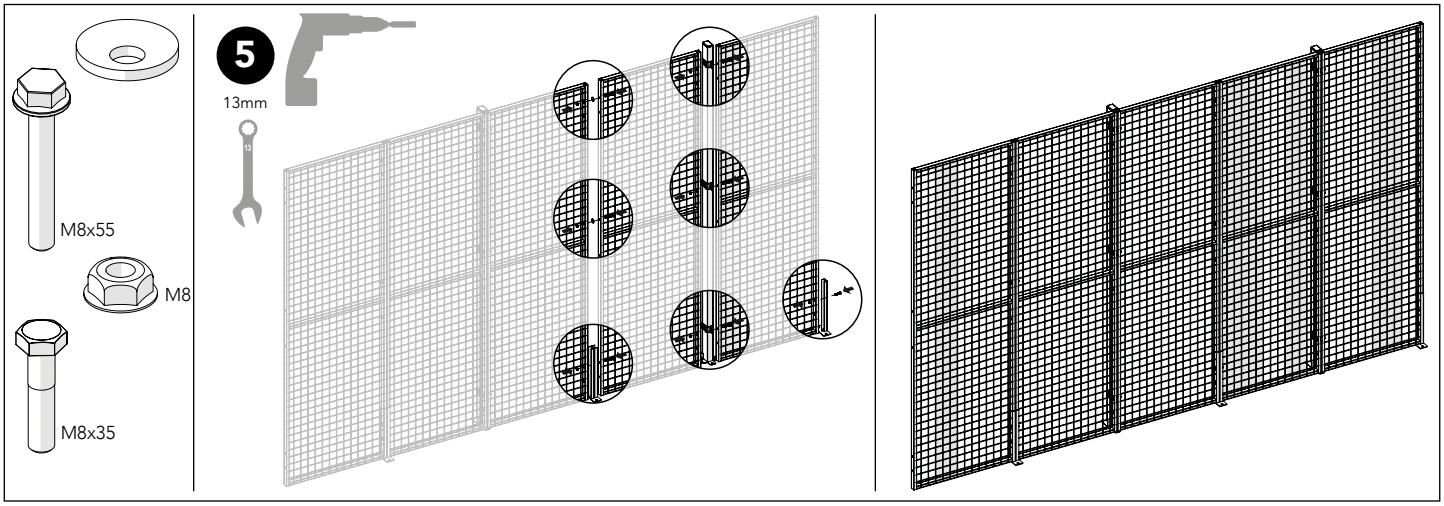

Art no: 88754742 ver. 004

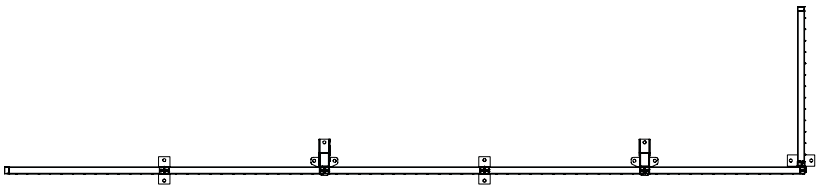

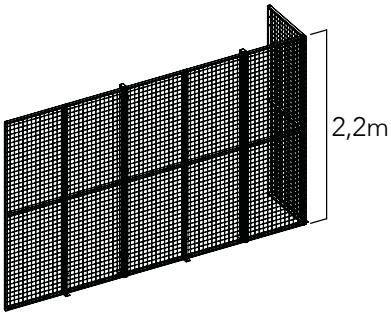

Kit Corner Bracket

1

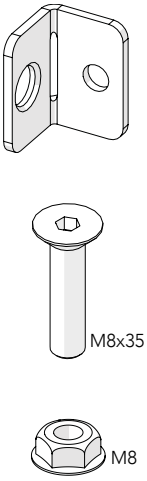

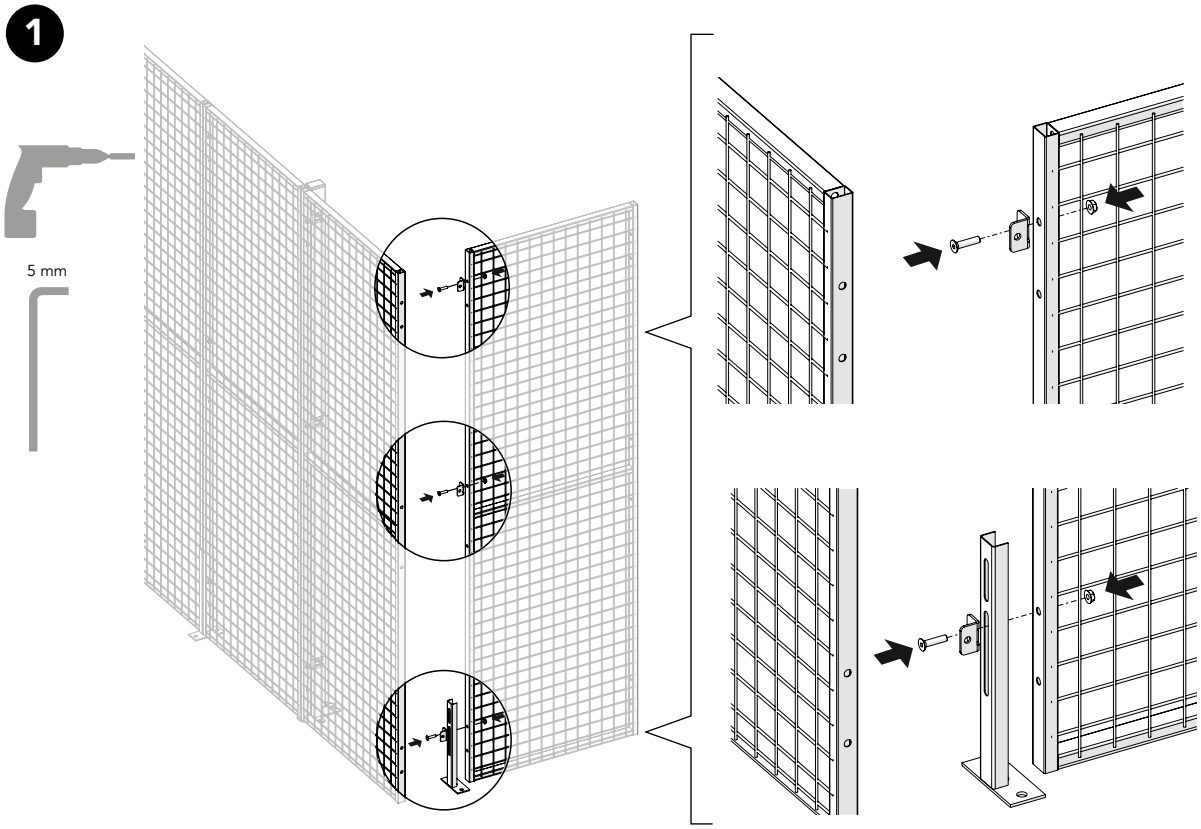

Kit Corner Bracket

2

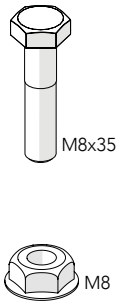

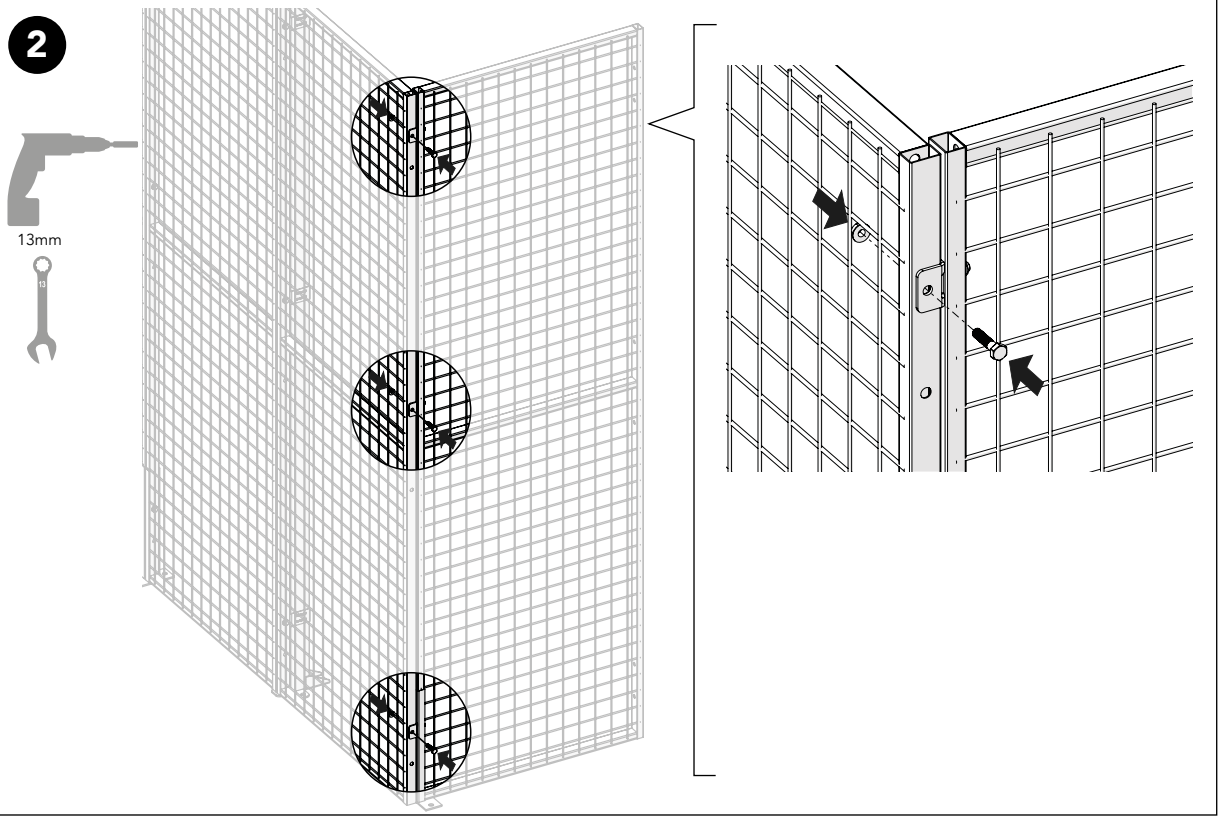

Art no: 88754742 ver. 004

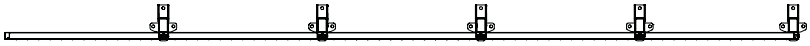

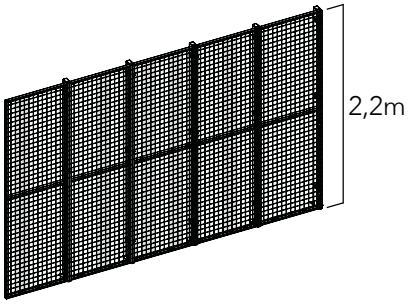

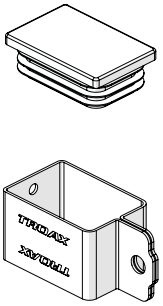

1

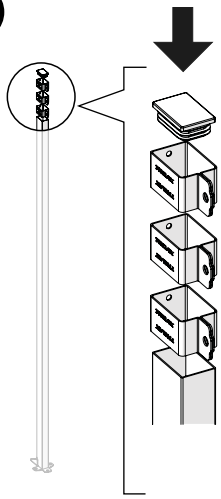

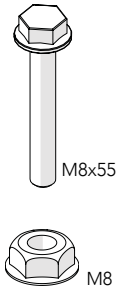

2

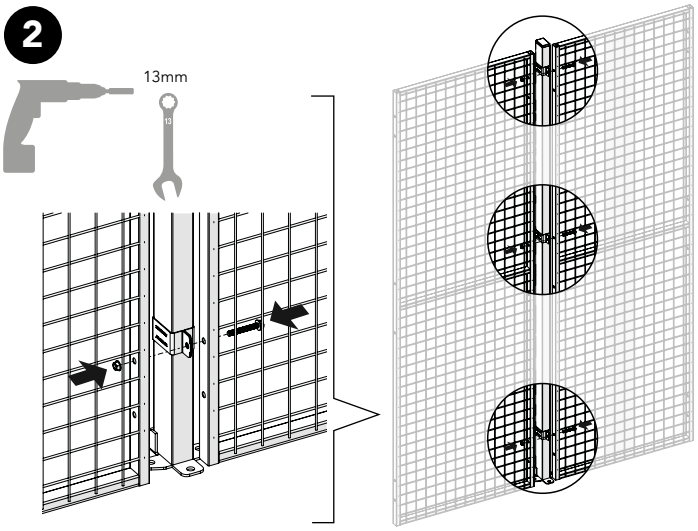

3

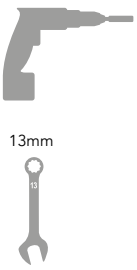

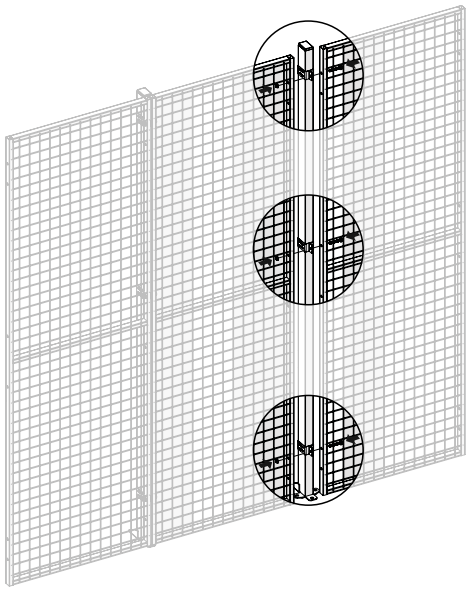

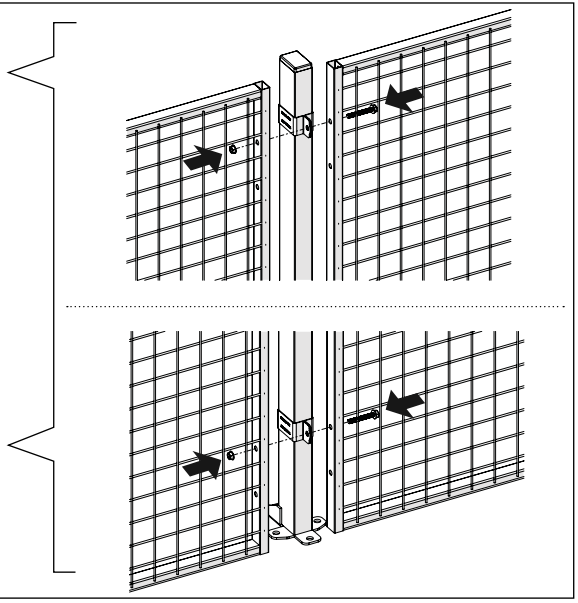

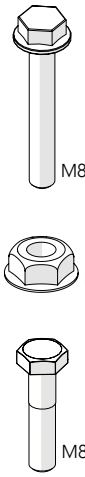

4

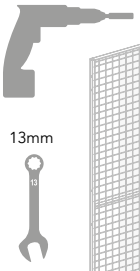

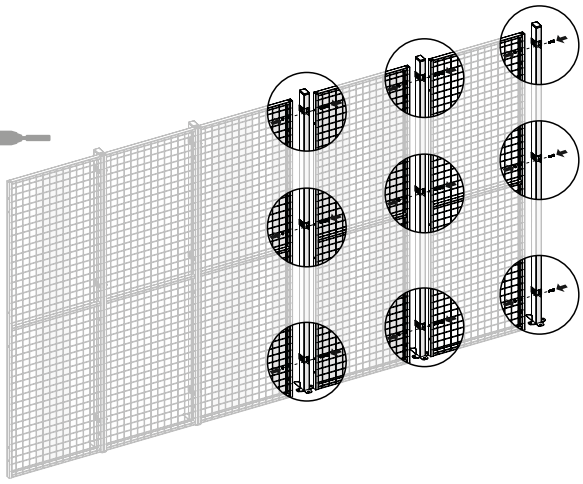

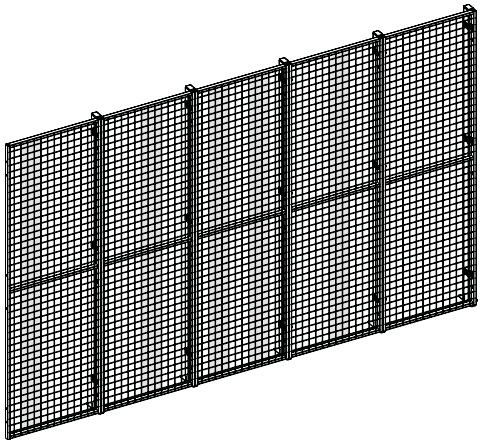

Art no: 88754742 ver. 004

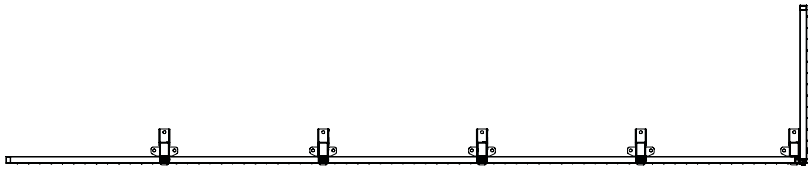

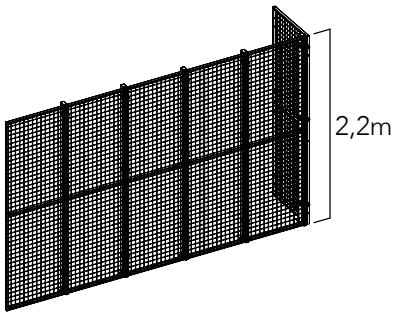

Kit Corner Bracket

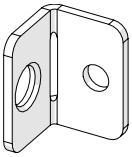

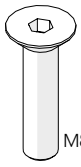

1

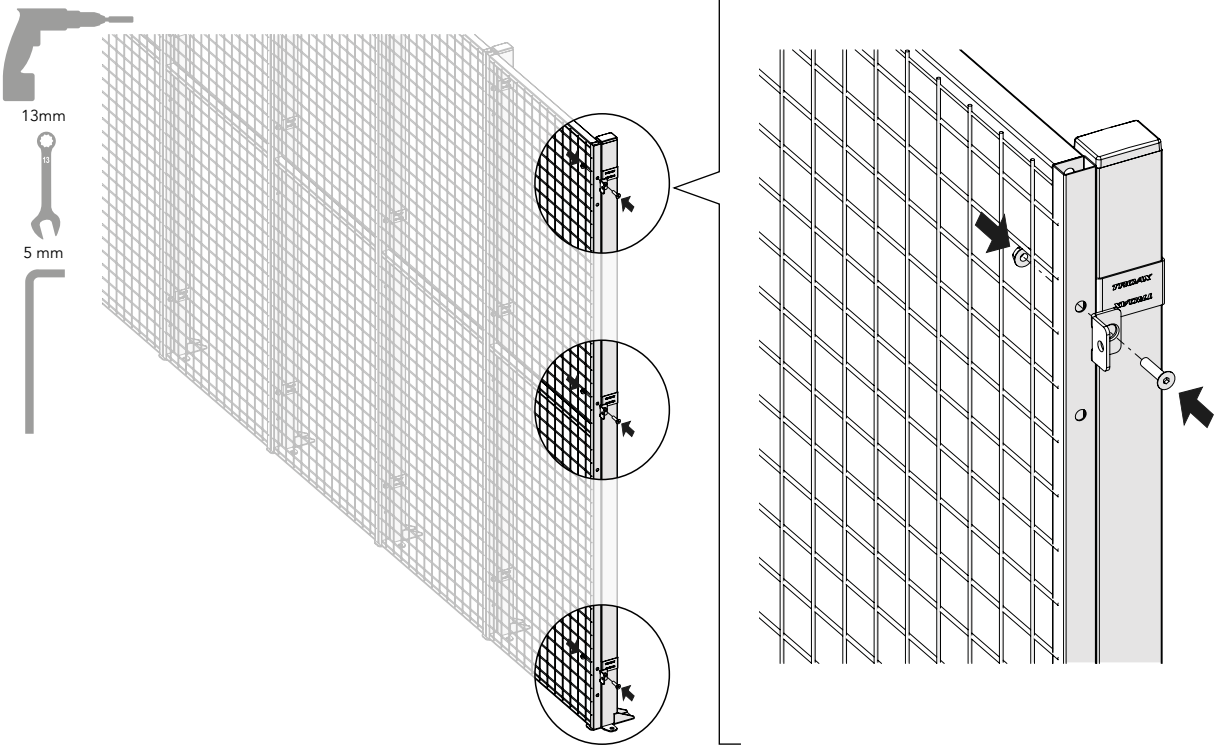

Art no: 88754742 ver. 004

Kit Corner Bracket

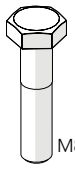
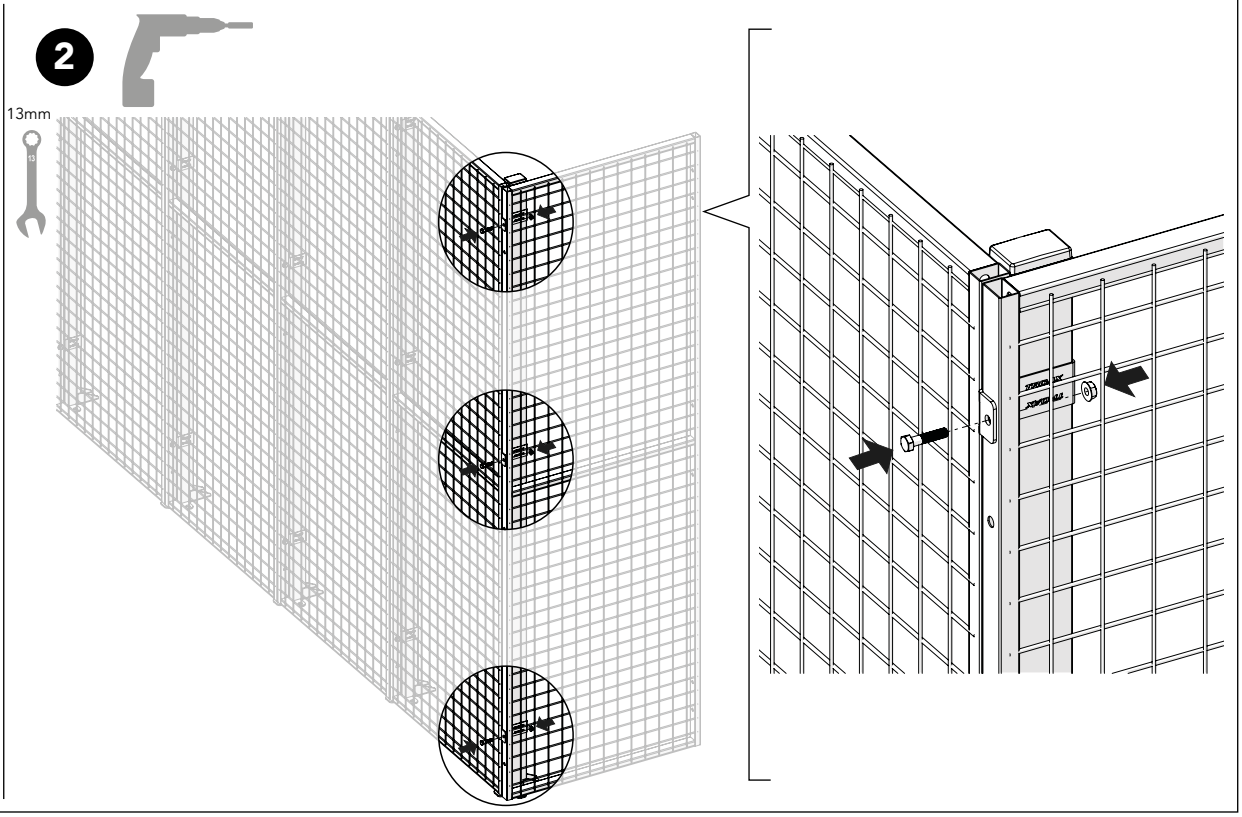
2