TROAX®

Machine guarding

Wire Tray Fixings

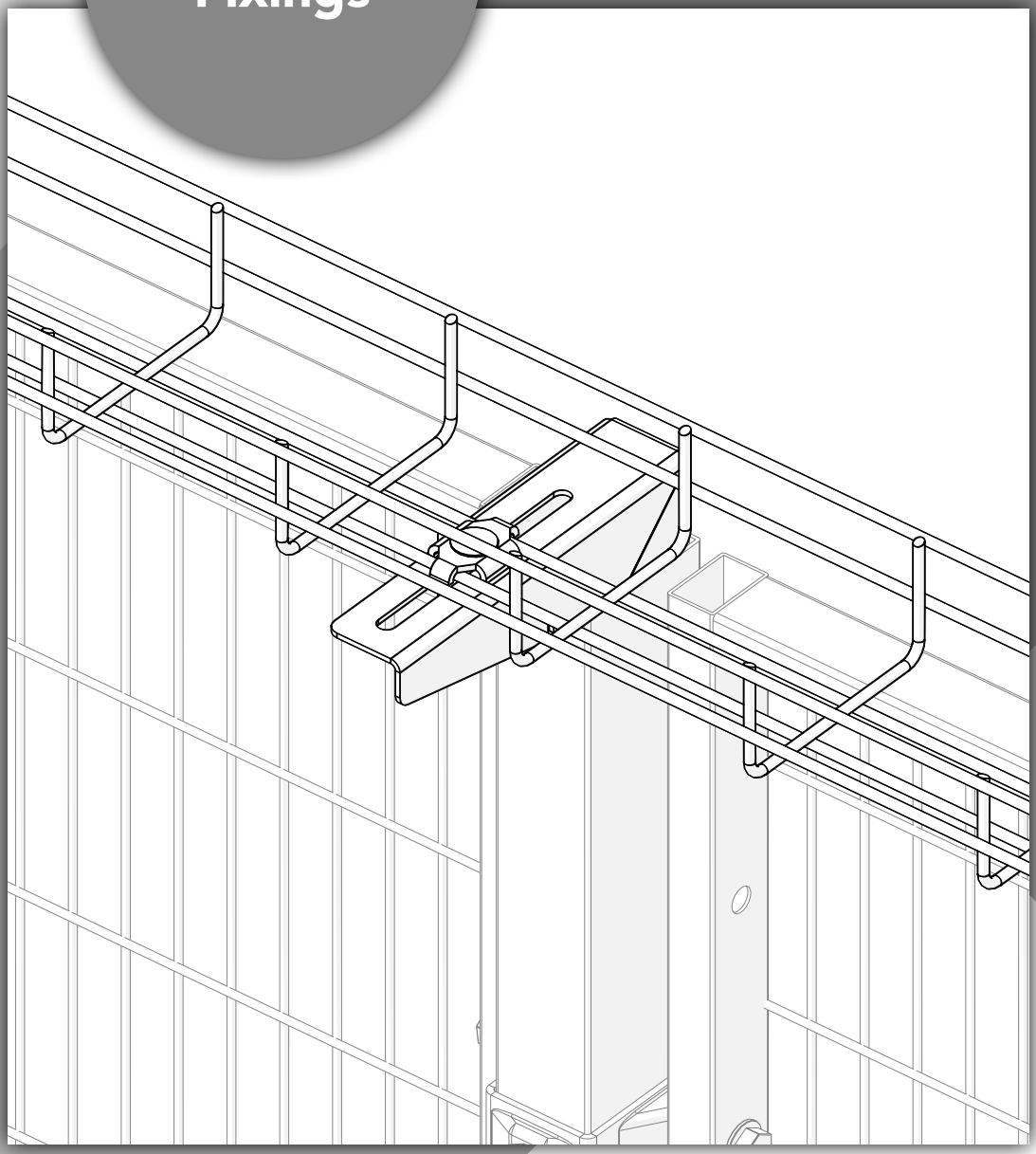

Art no: 88754322 ver. 01 Print no: 202002-2278-EN

Follow me

www.troax.com

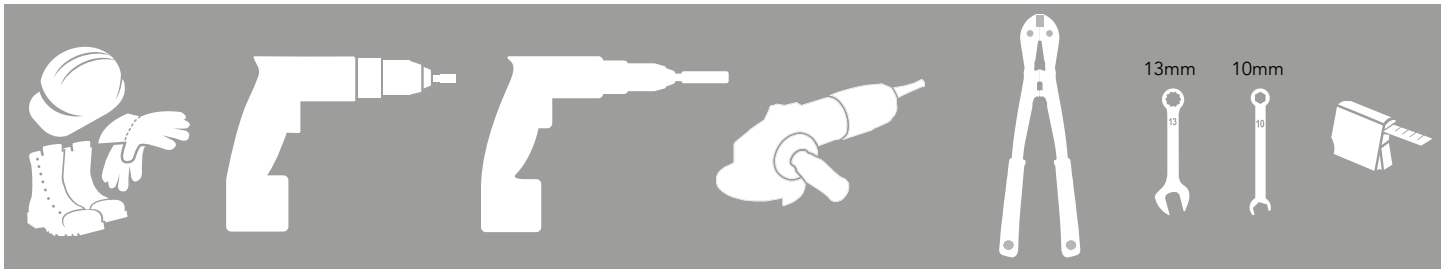

Wire Tray fixings

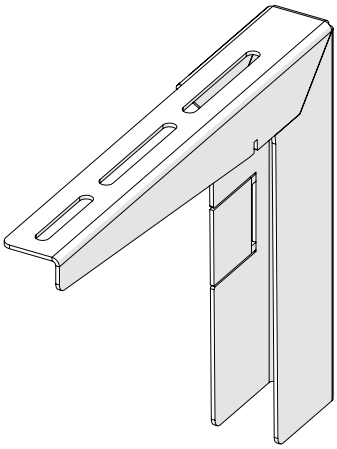

Post Console 200

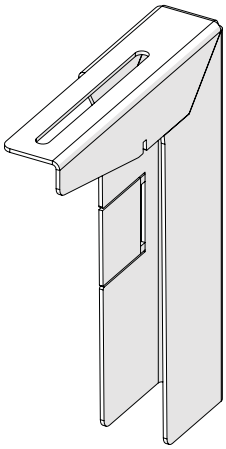

Post Console 100

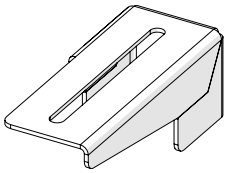

Smart Fix Console

Wire tray cnsl fixing x20 89100195

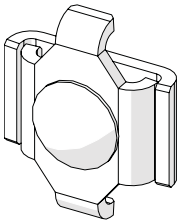

Wire tray connector x10 89100196

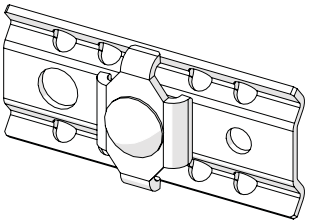

Quickdrilling screw

20500350

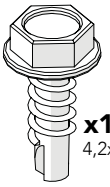

x15
4,2x13

Wire tray T/corner x10 89100197

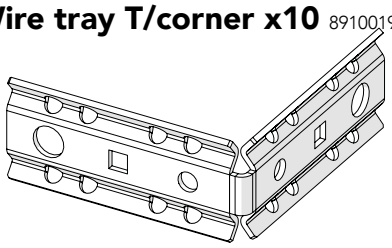

Wire tray vertical fixing 89100199

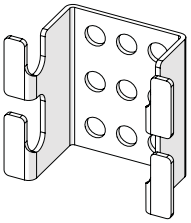

Wire tray acc. fixing 89100198

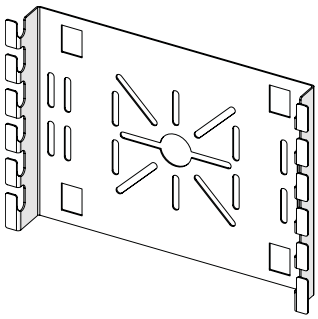

Smartfix Open 36700102

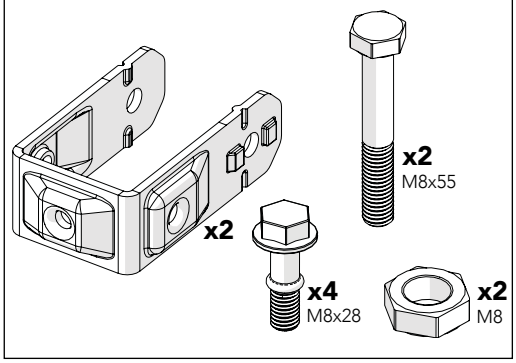

Art no: 88754322 ver. 01

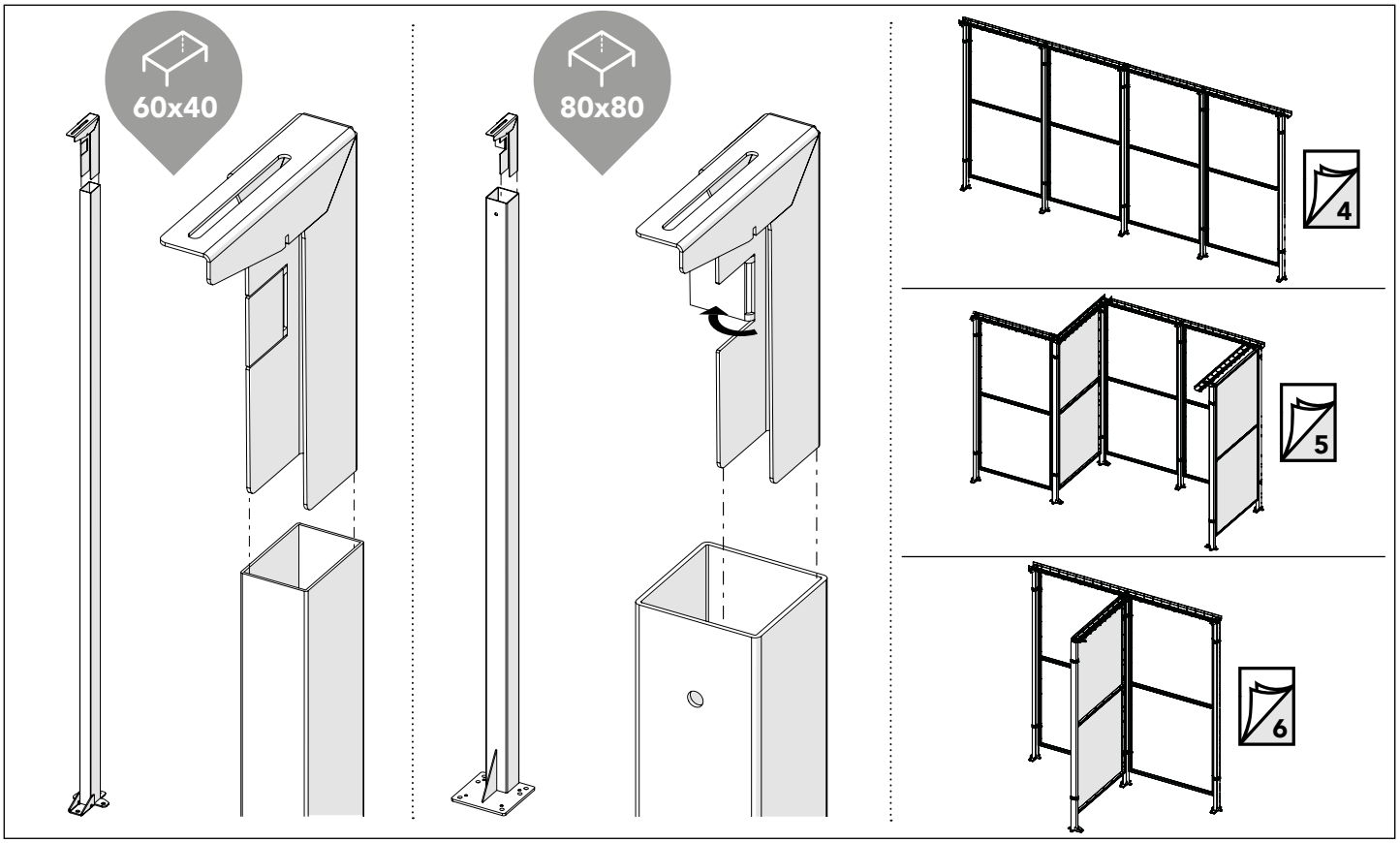

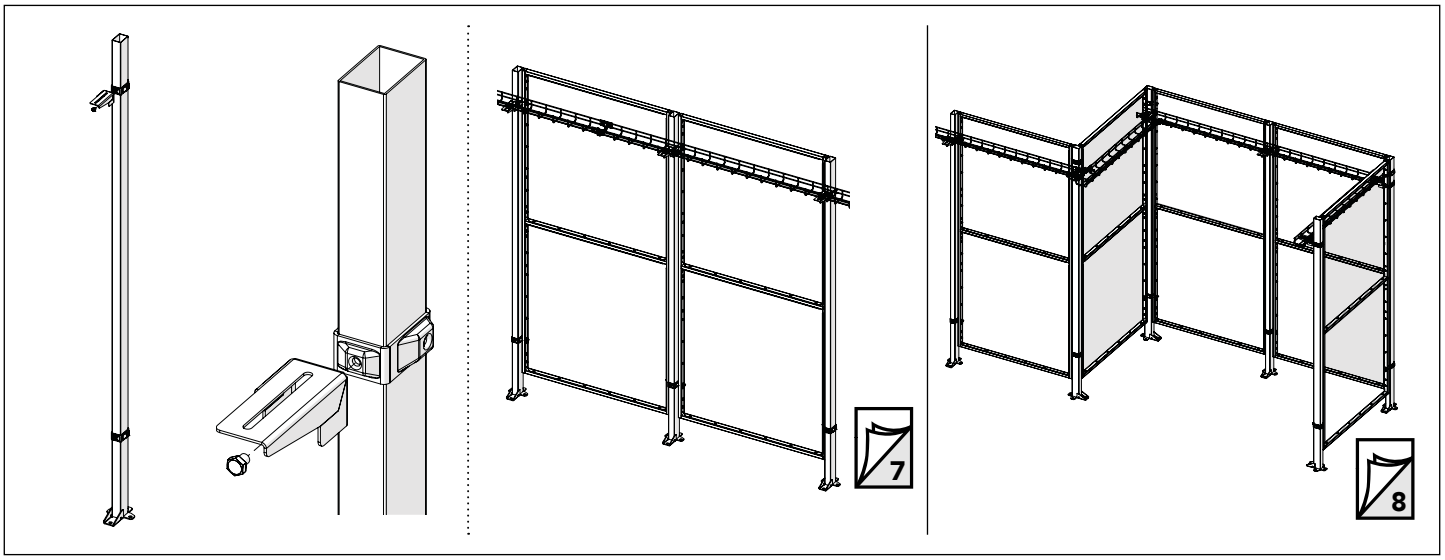

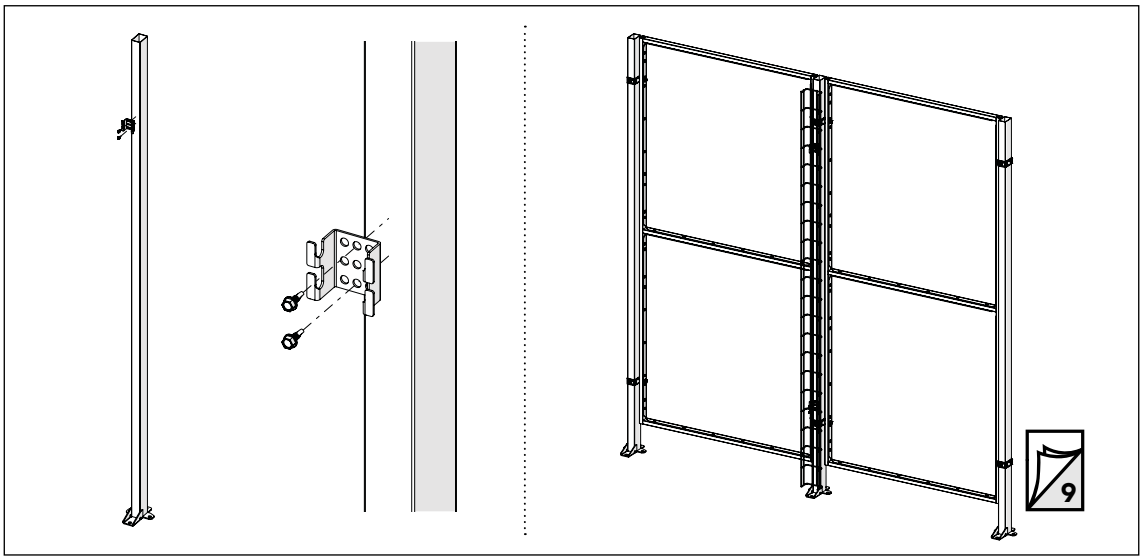

Art no: 88754322 ver. 01

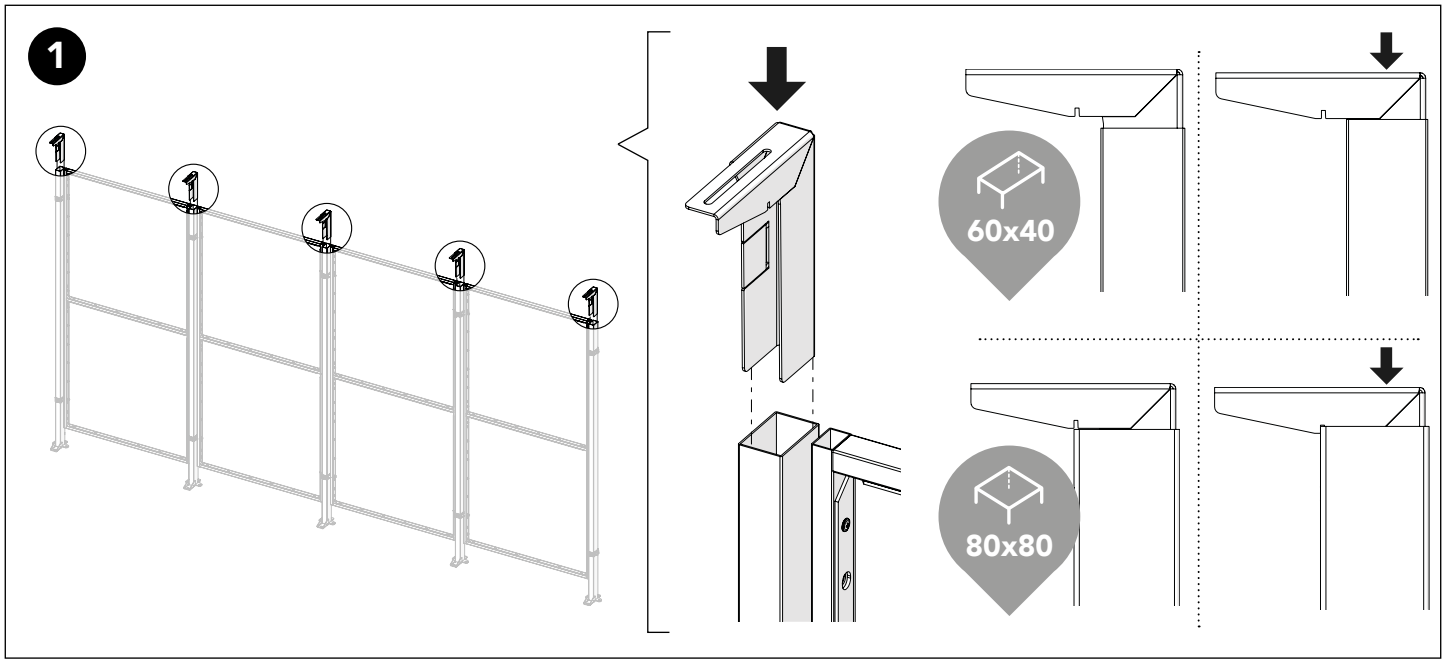

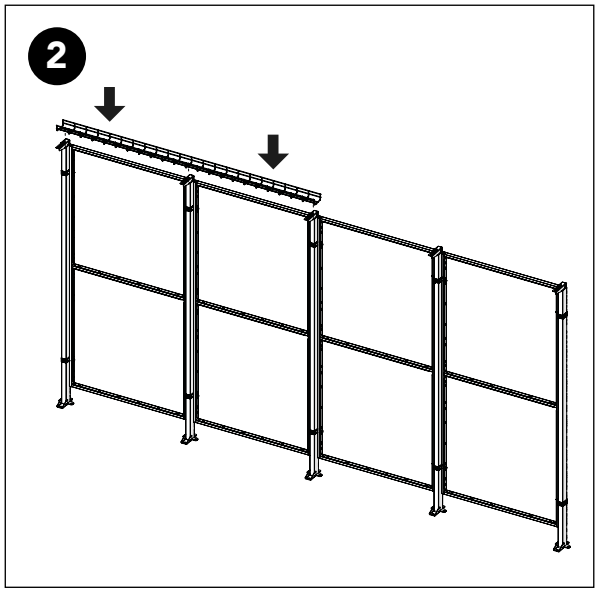

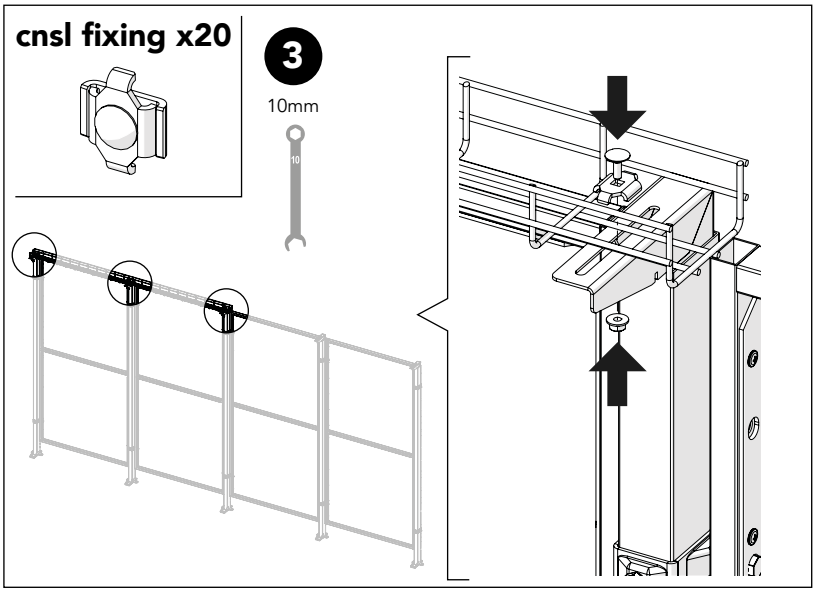

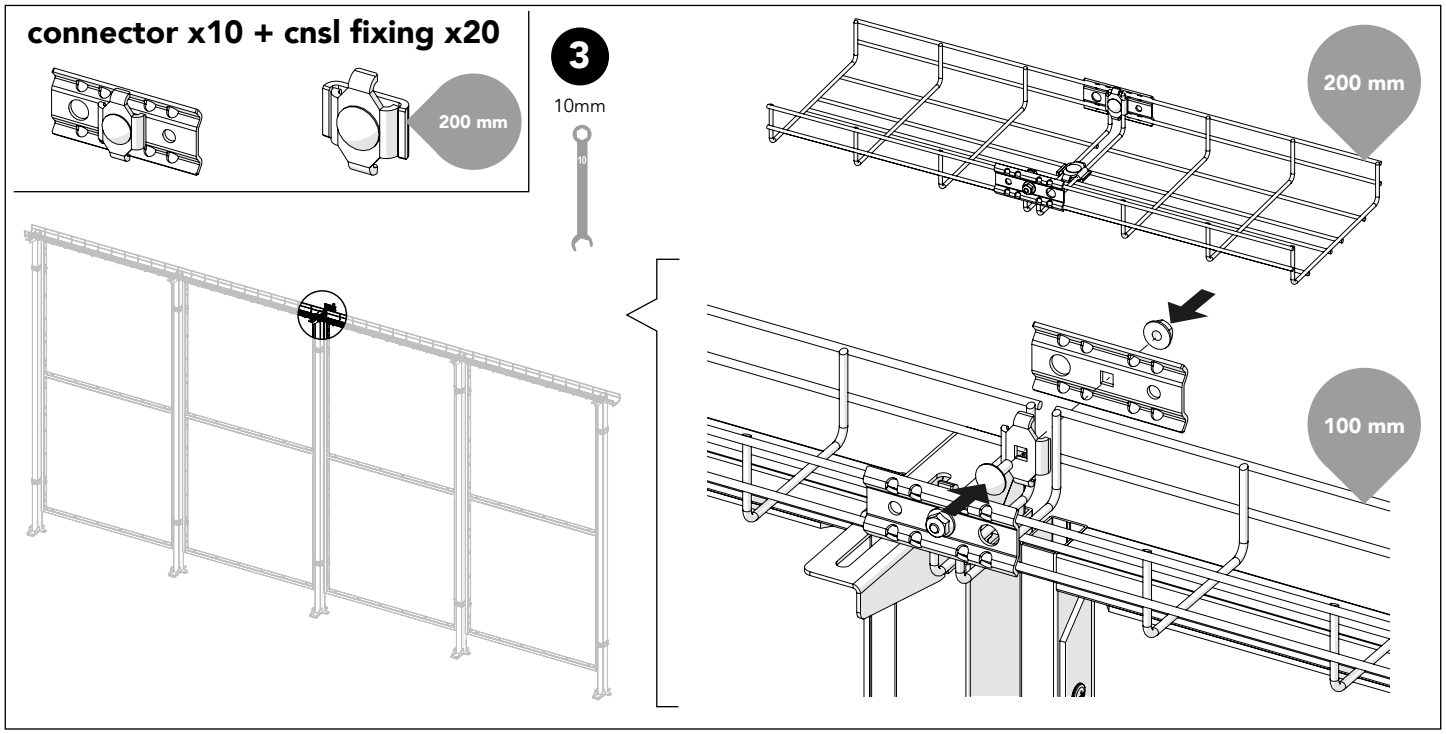

Art no: 88754322 ver. 01

cnsl fixing x20

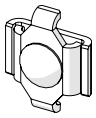

10mm

1

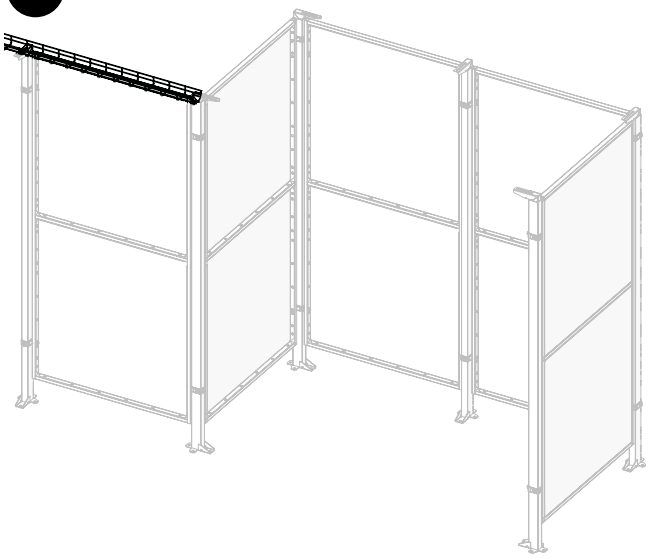

2

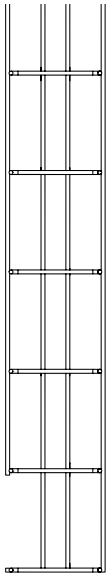

T/corner x10 + cnsl fixing x20

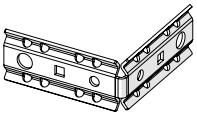

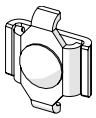

10mm

3

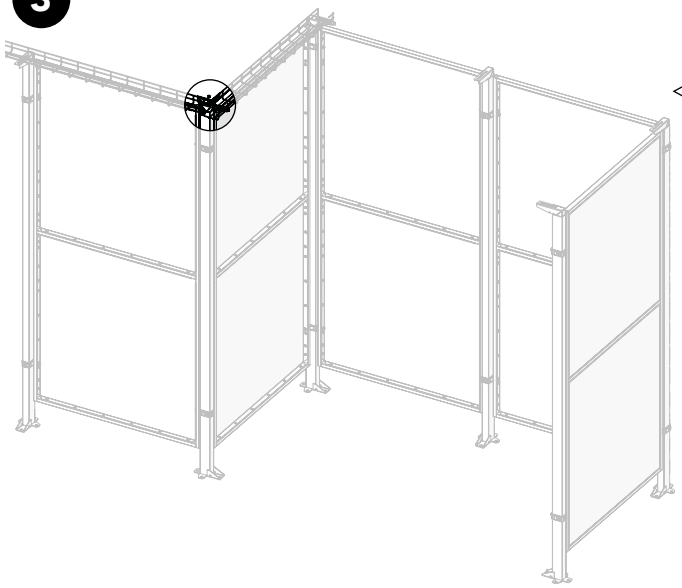

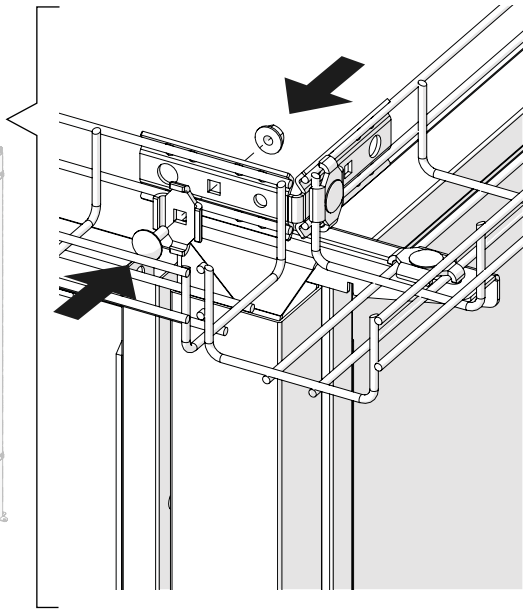

T/corner x10 + cnsl fixing x20

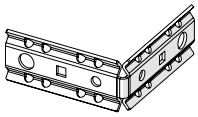

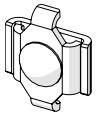

10mm

4

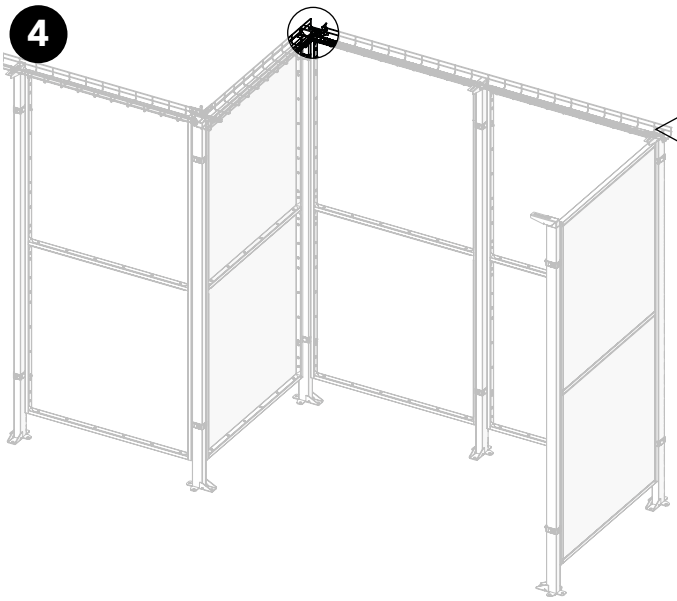

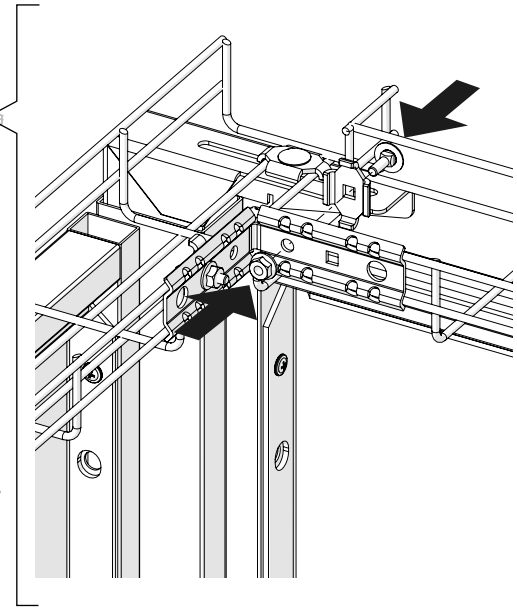

Art no: 88754322 ver. 01

cnsl fixing x20

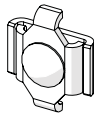

1

10mm

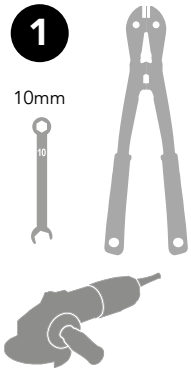

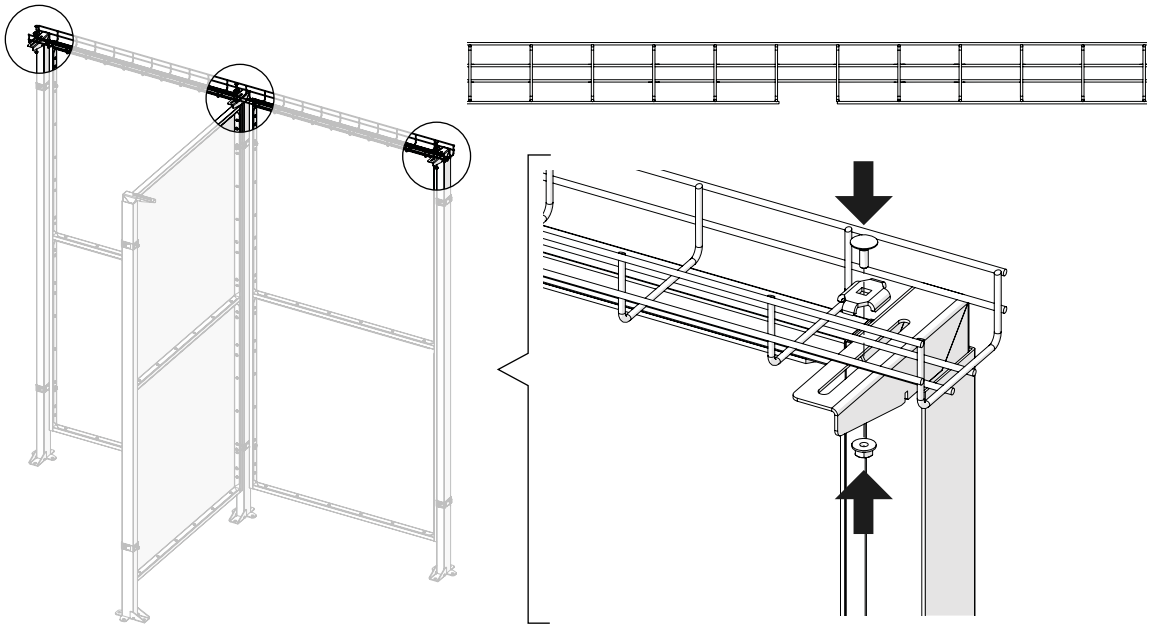

cnsl fixing x20

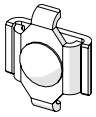

2

10mm

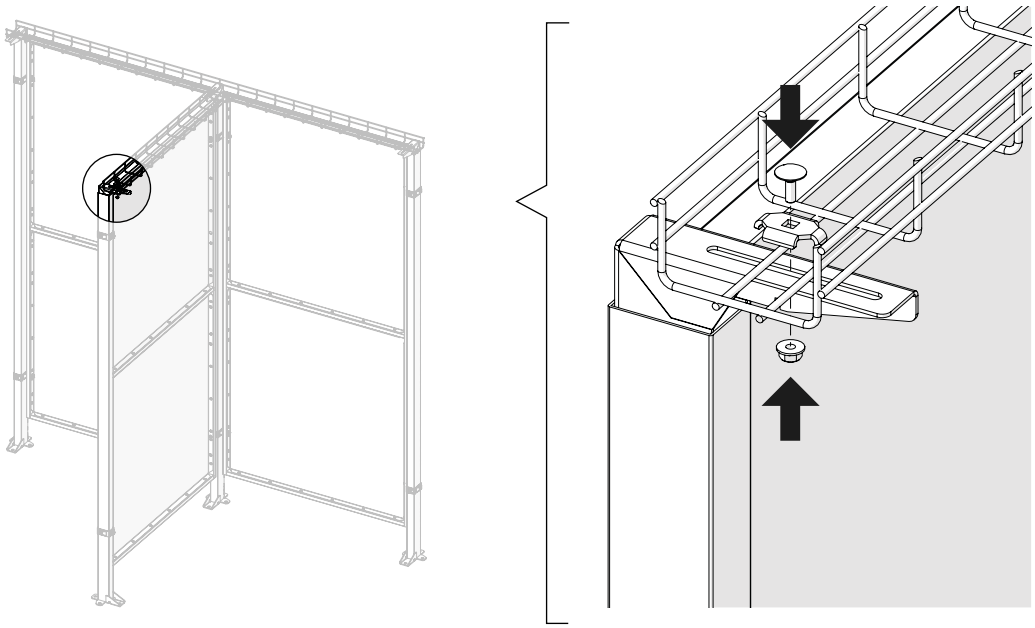

Art no: 88754322 ver. 01

T/corner x10 + cnsl fixing x20

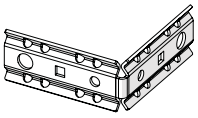

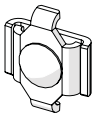

3

10mm

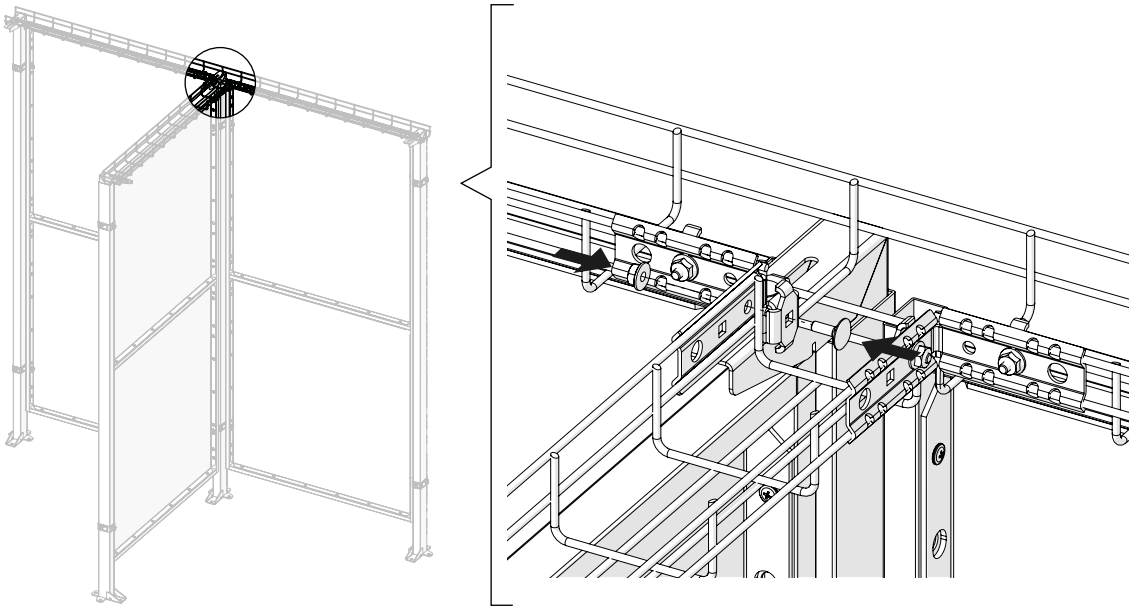

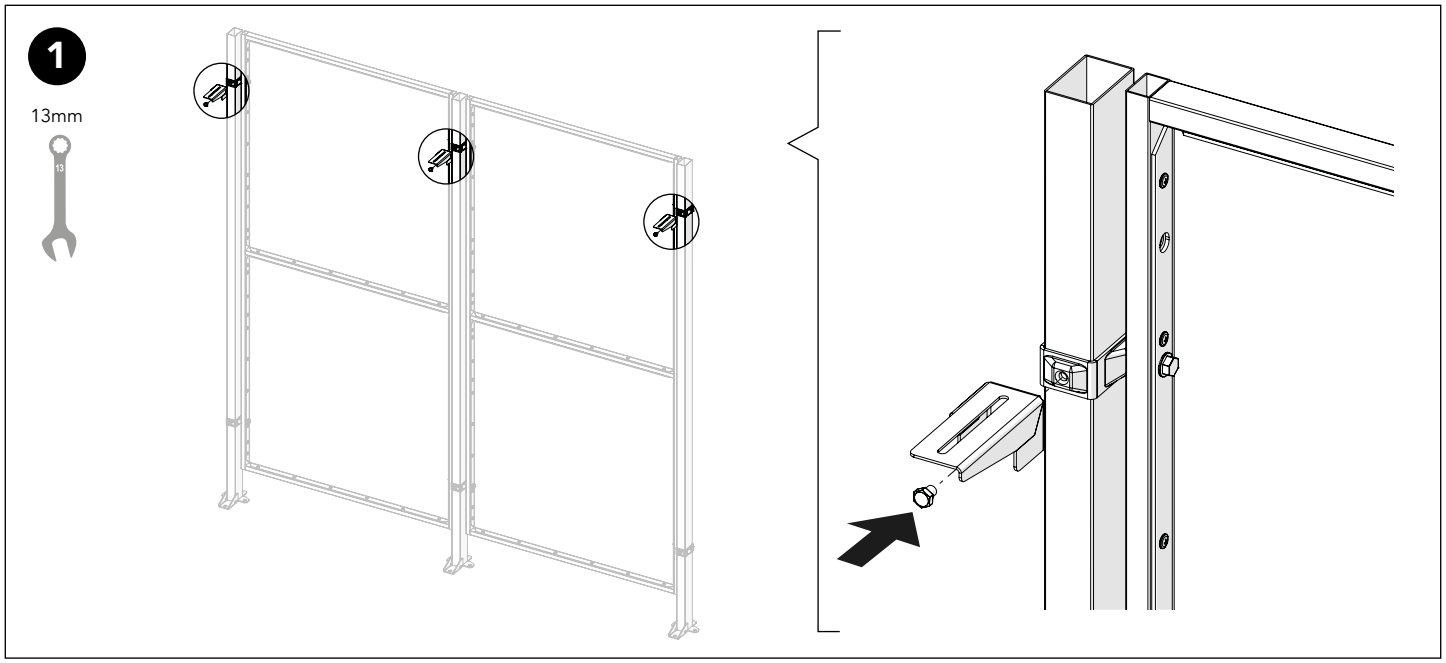

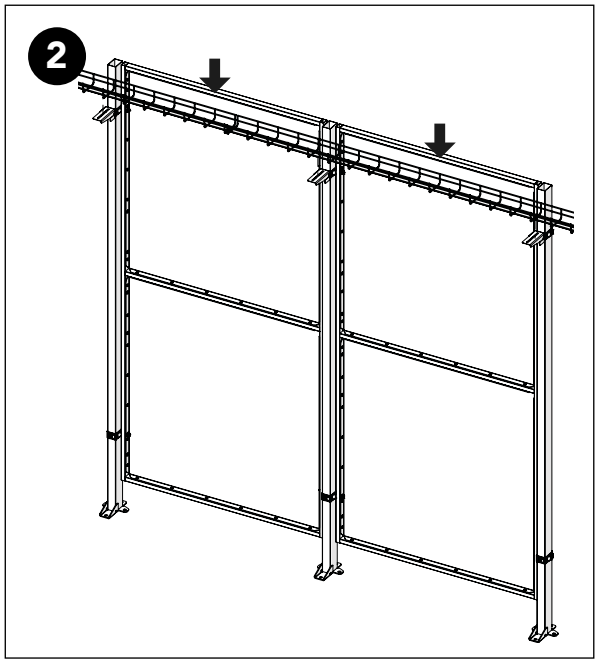

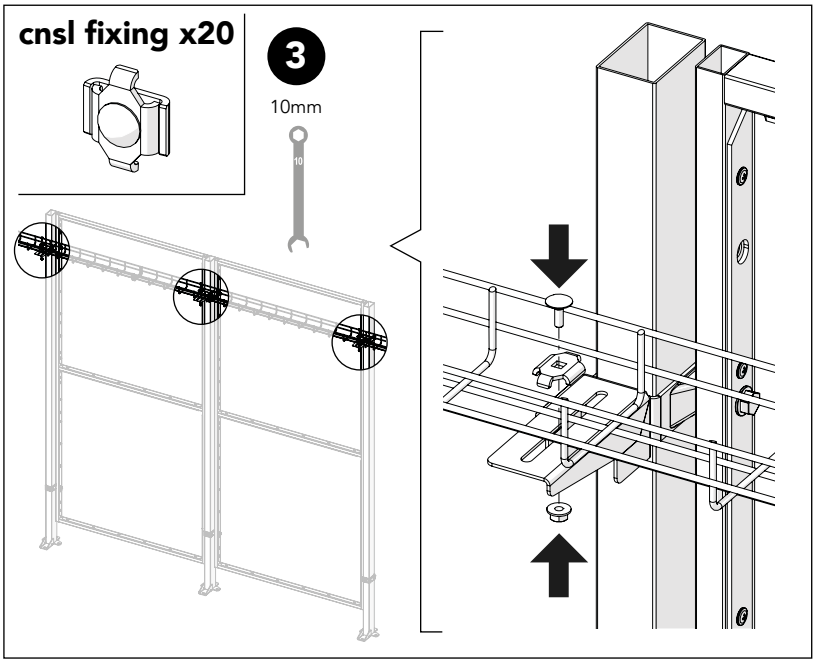

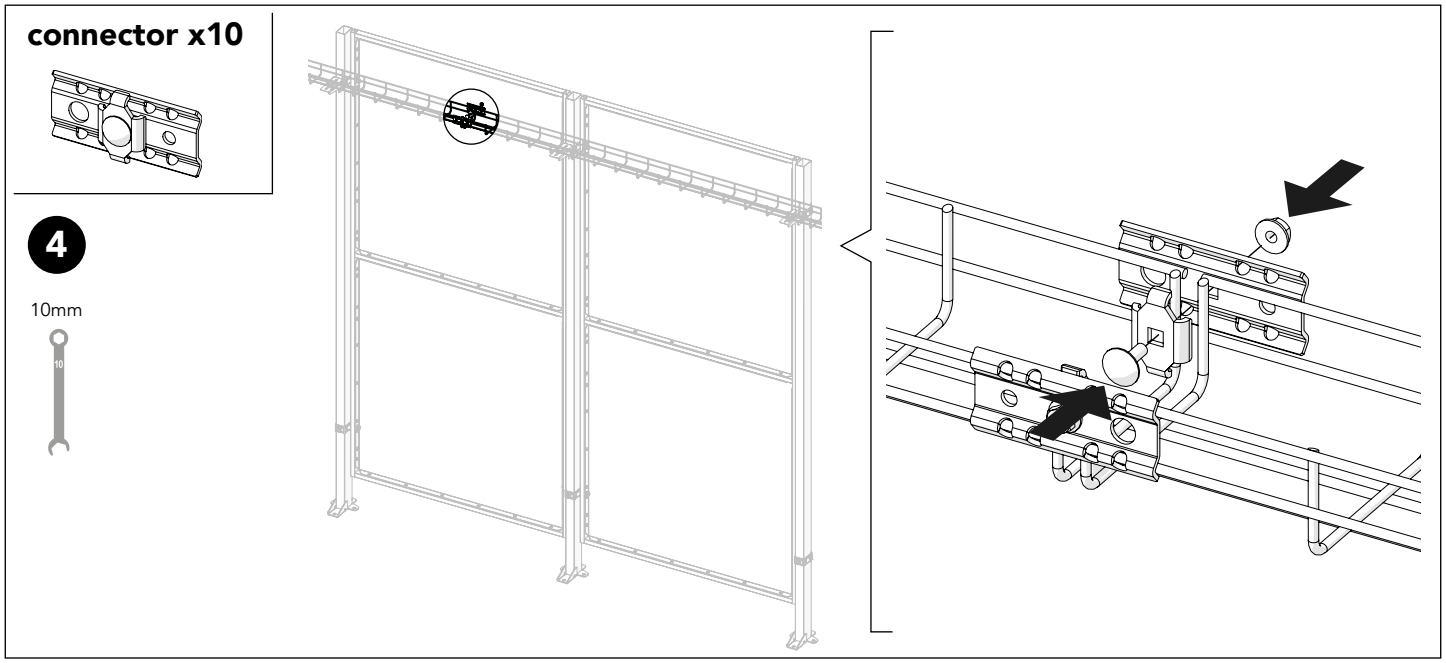

Art no: 88754322 ver. 01

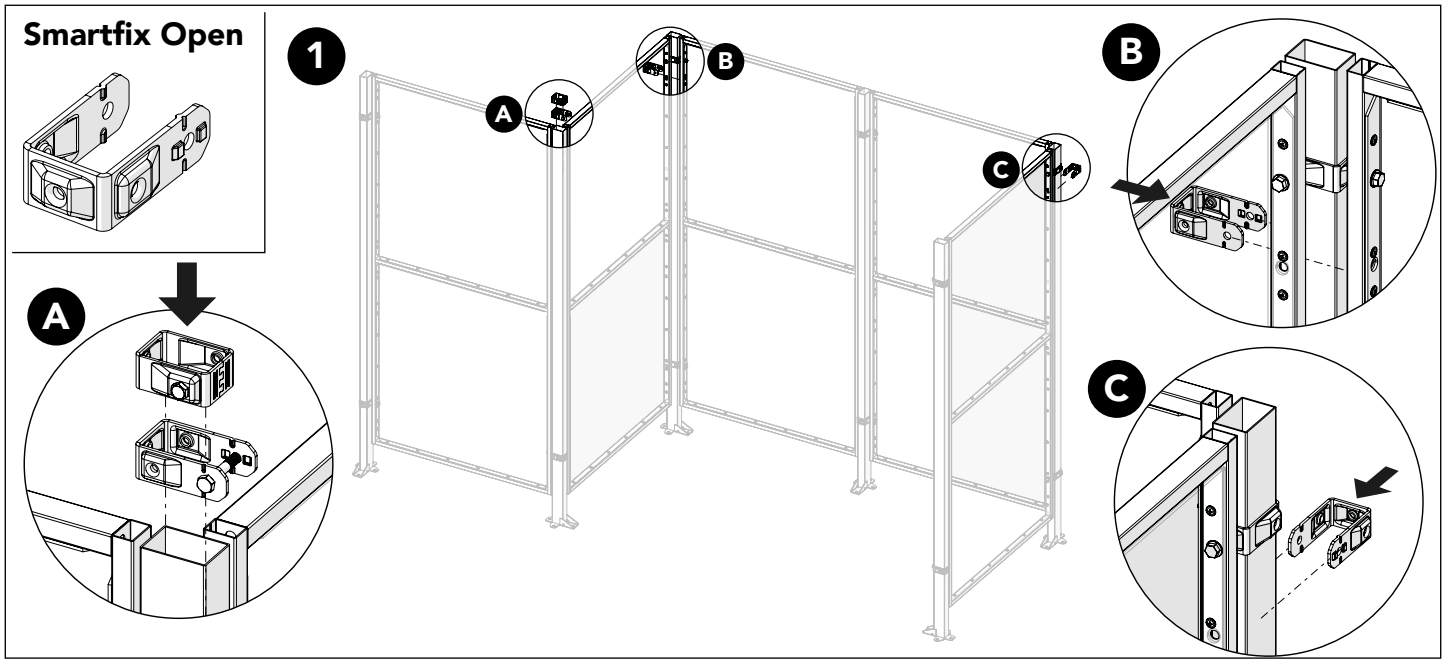

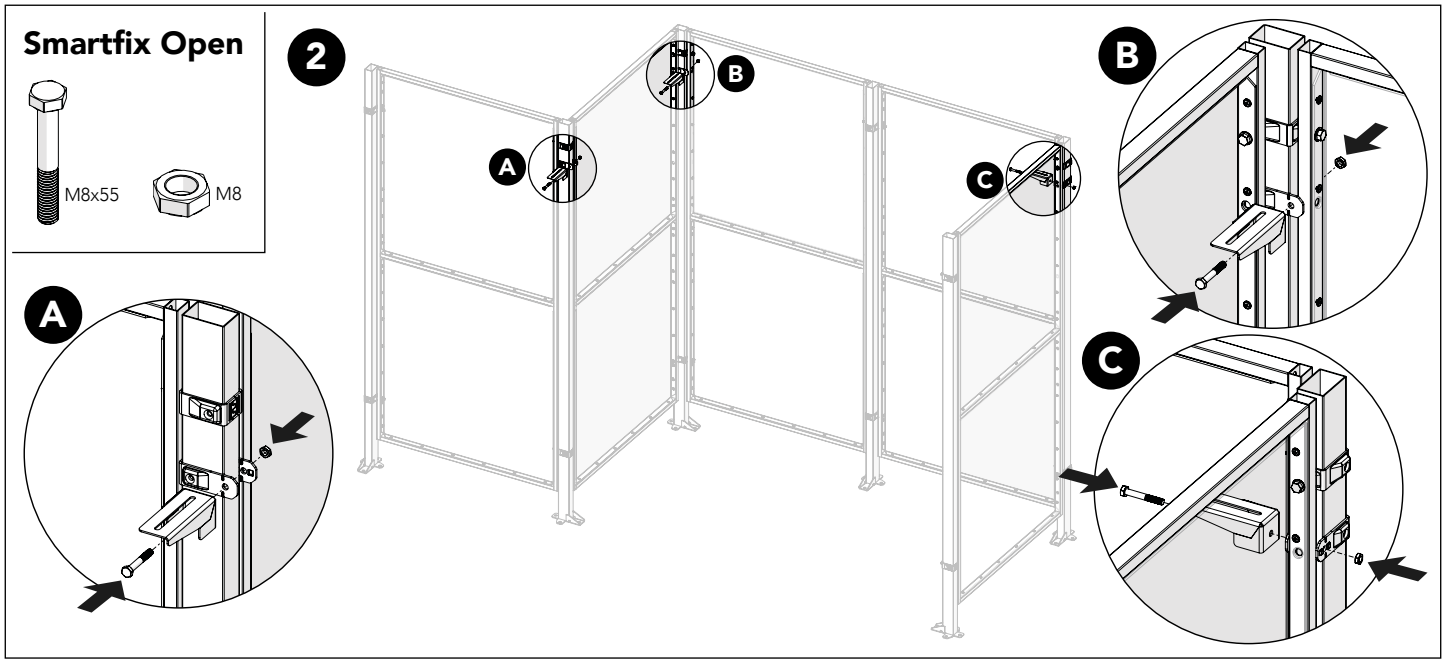

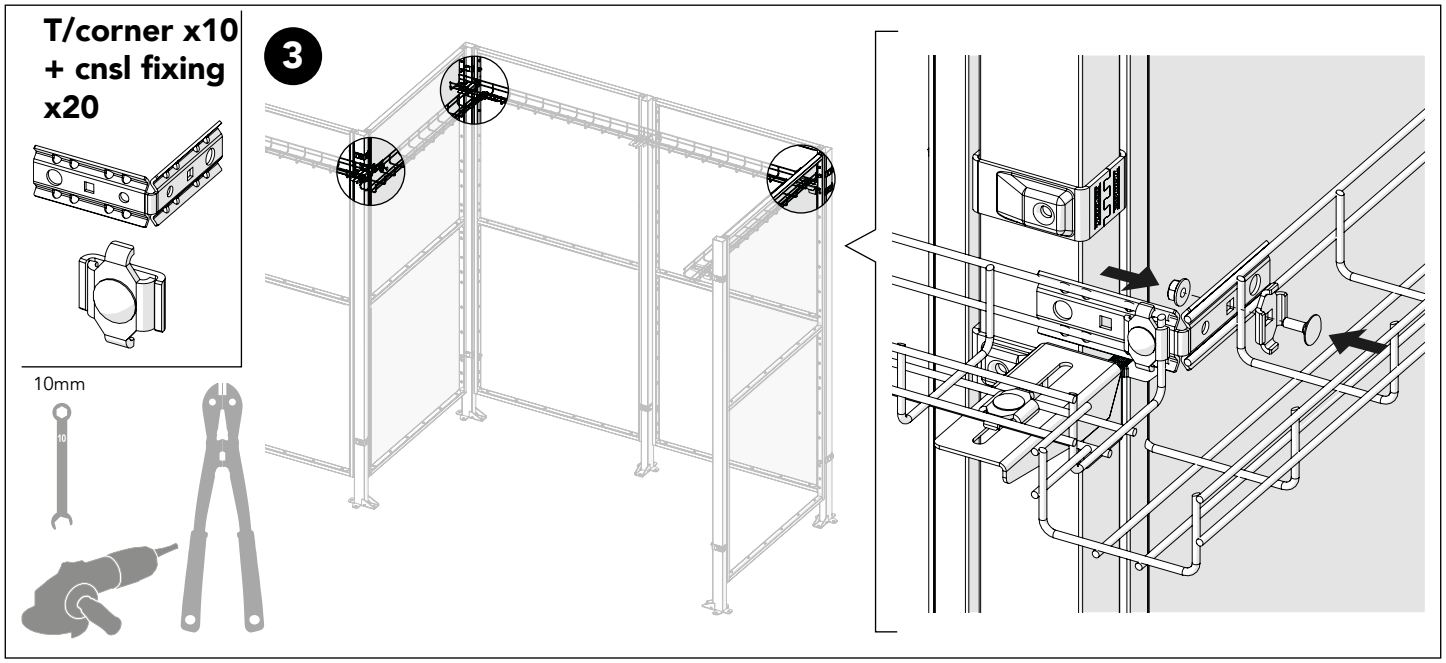

Art no: 88754322 ver. 01

Vertical fixing

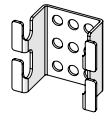

1

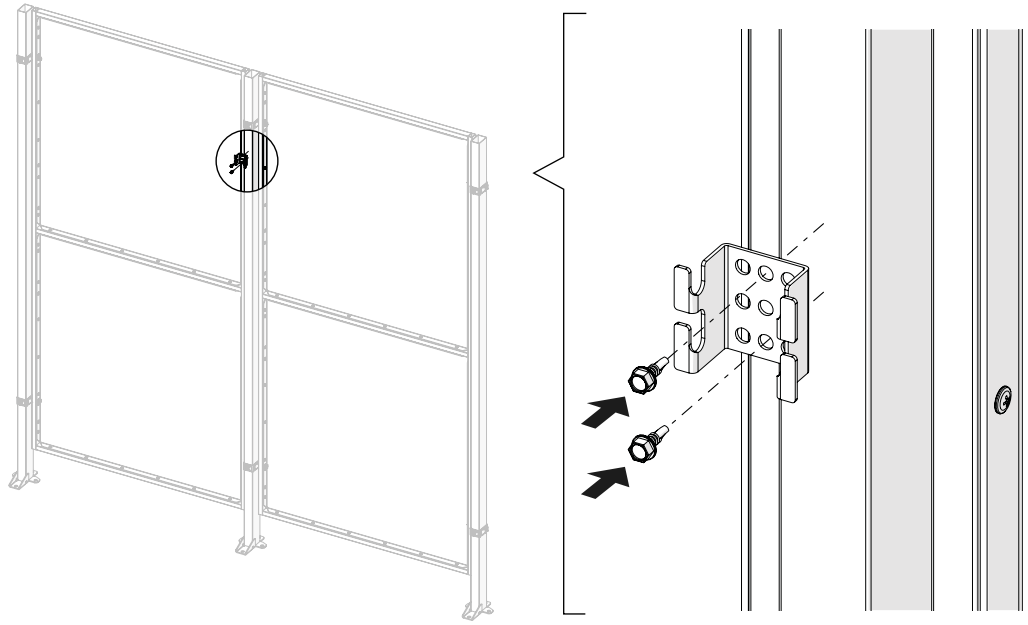

2

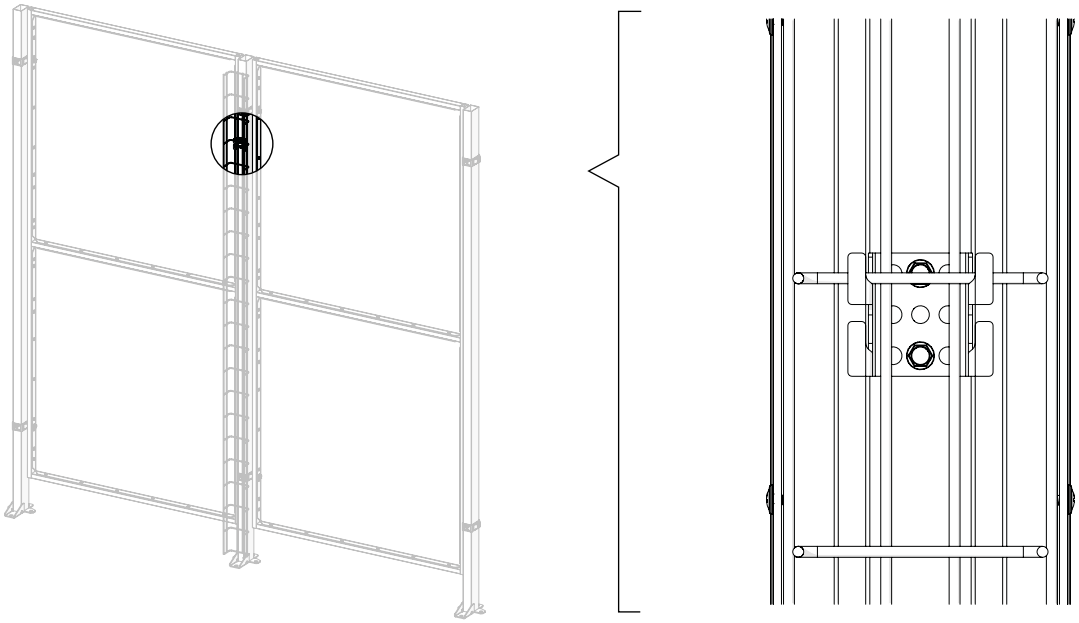

Vertical fixing

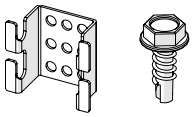

3

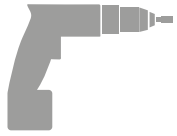

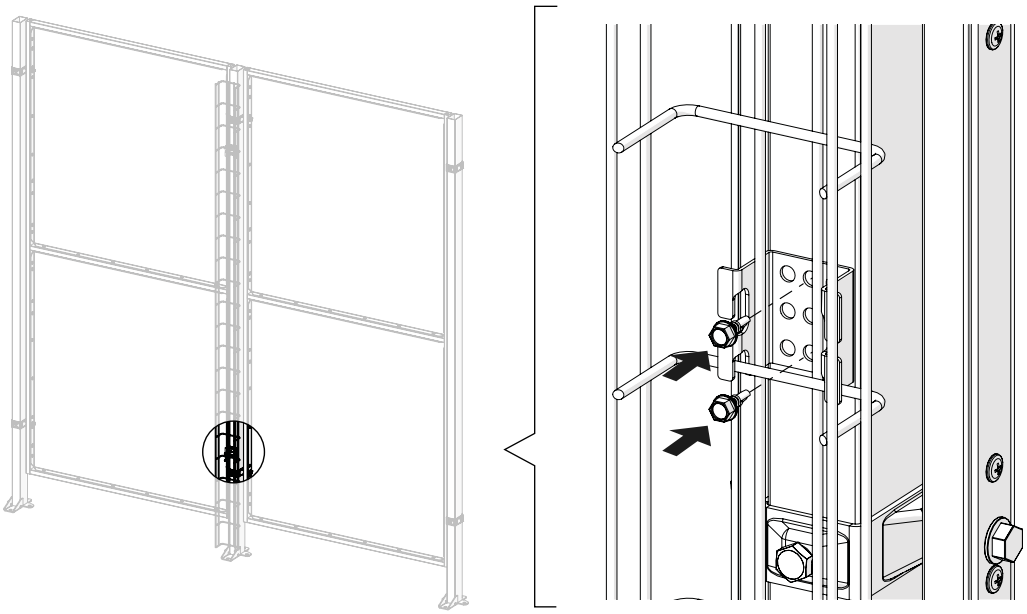

Art no: 88754322 ver. 01