ASSEMBLY INSTRUCTION
– JUST FOLLOW ME

SMART FIX SYSTEM WP

KIT 36700074

3D
INTERACTIVE
ASSEMBLY
INSTRUCTION

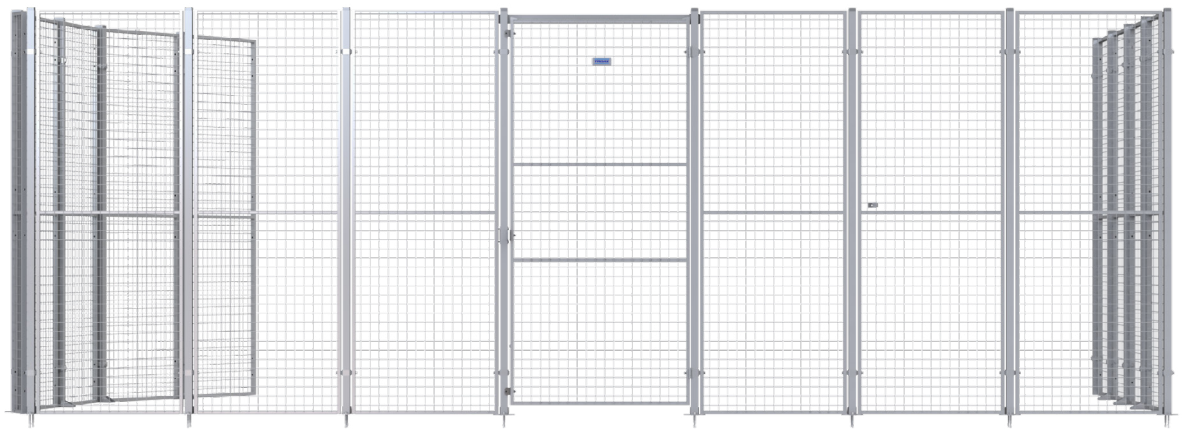

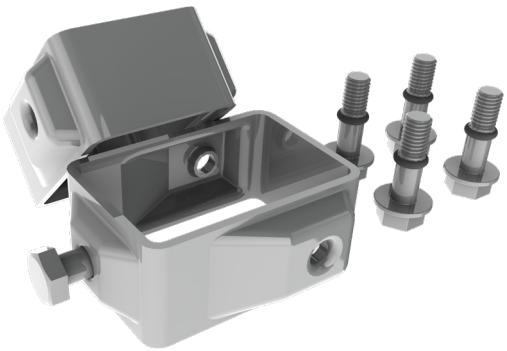

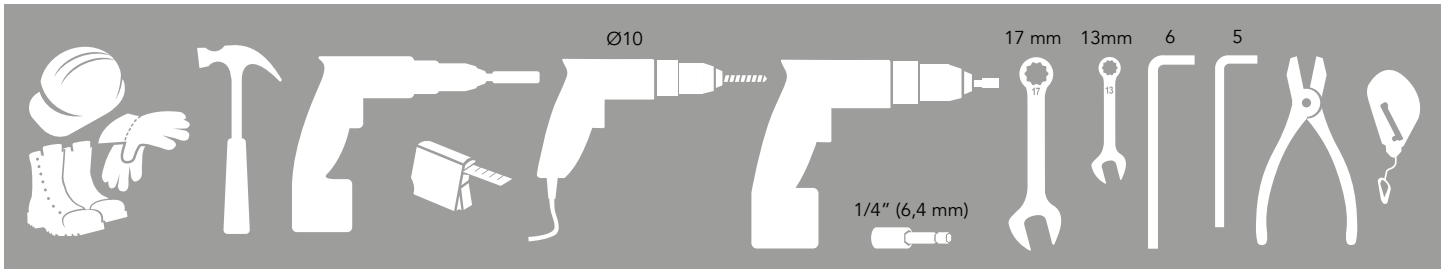

Smart Fix System WP

Kit Bracket SMF 36700074

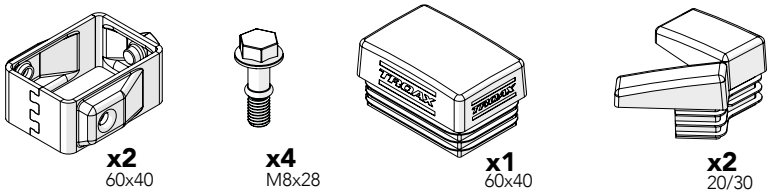

Kit Hinge 36904990

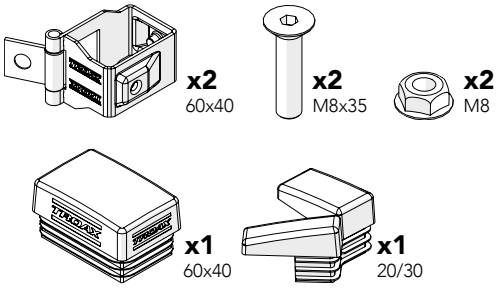

Bag for kit 88695000

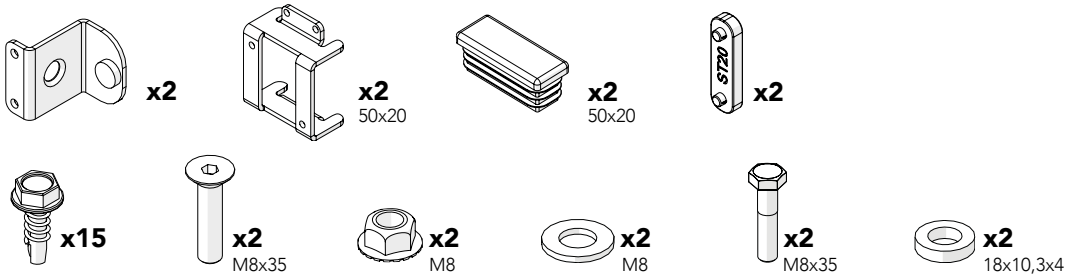

Art no: 88754785 ver. 002

Kit Padlock 60x40 SMF 36907920

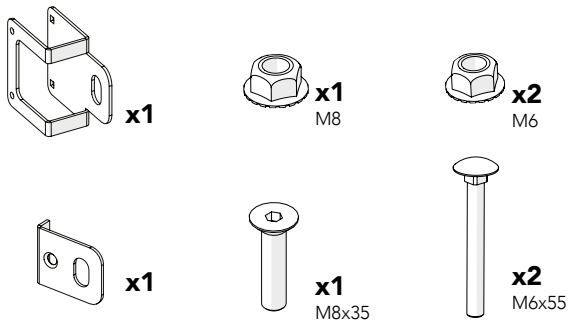

Kit Corner Bracket SMF 36700096

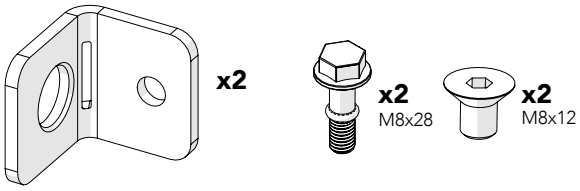

Troax sign 89200000

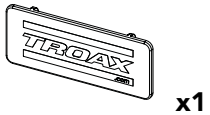

Expander 89050090

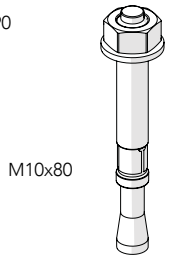

Kit Sliding Door 36905520

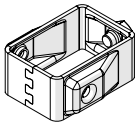

x4
60x40

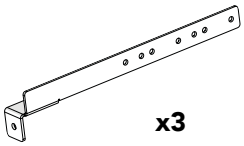

x3

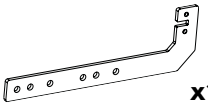

x1

Bag for kit 5520 88695520

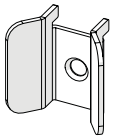

x1
62 mm

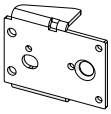

x1

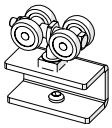

x2

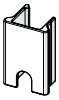

x1
ST20

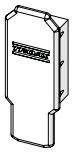

x2

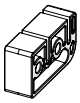

x1
3 mm

x1
3 mm

x6
M8x12

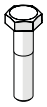

x3
M8x35

x2
M6x25

x1
M8x20

x3
M8x20

x15

x4
M8

x1
18x9x4

x3
M8

x2
6,4x12x1,6

Kit SMF T-Crossing 36908000

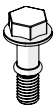

x2
M8x28

Quickdrilling screw 20500350

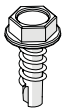

x15
4,2x13

Art no: 88754785 ver. 002

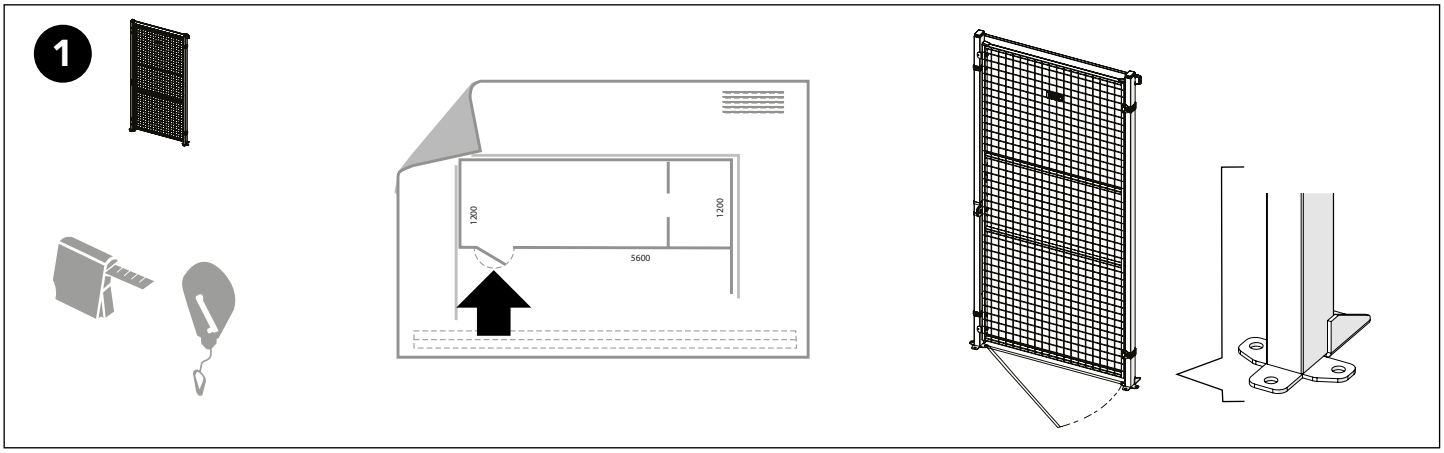

Kit Hinge

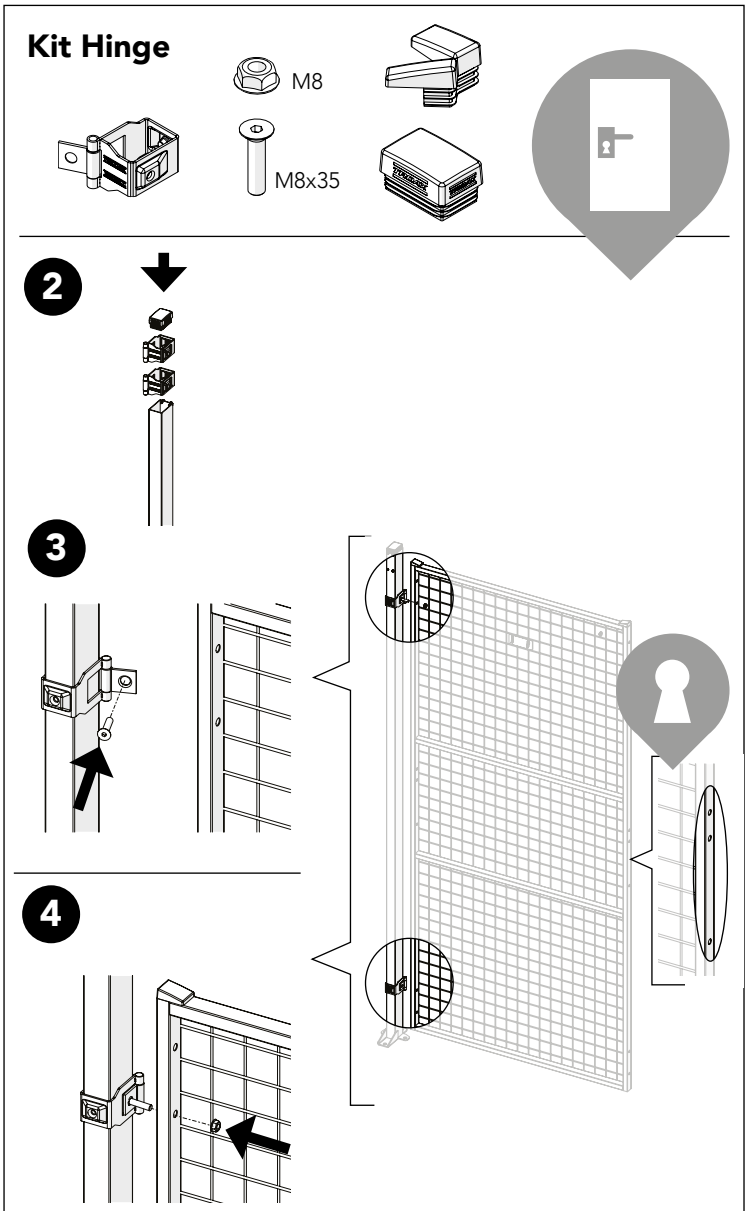

Bag for kit 5000

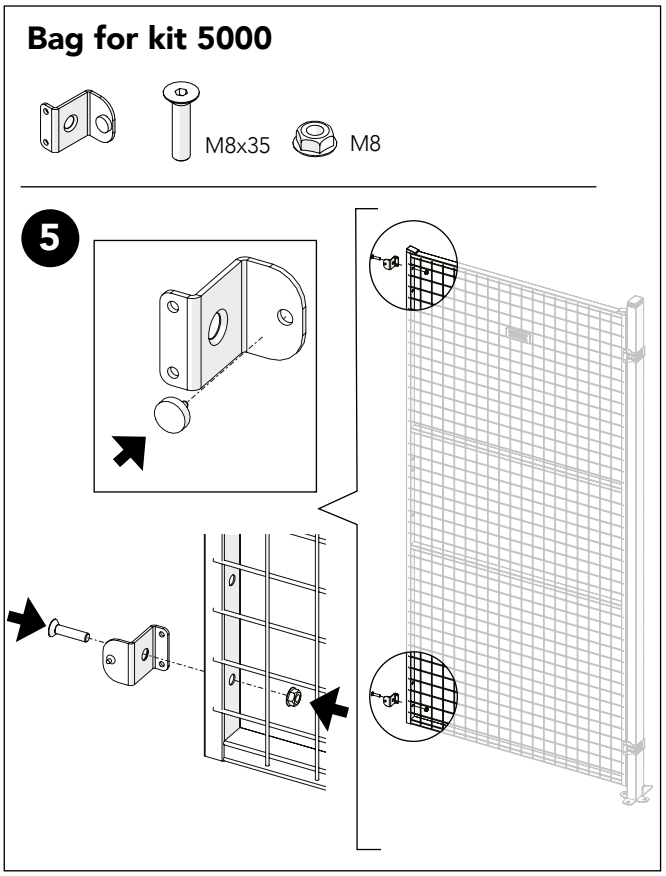

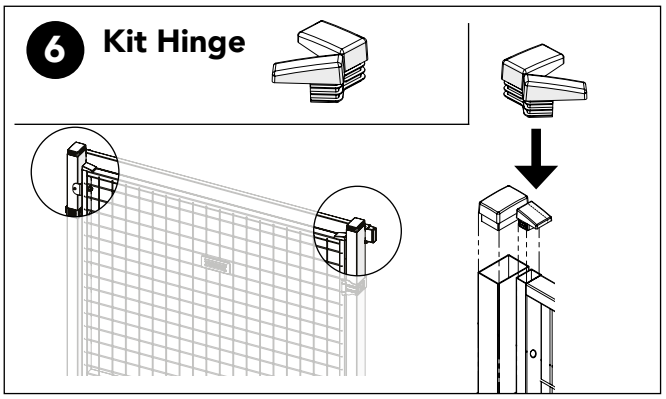

Art no: 88754785 ver. 002

Kit bracket SMF

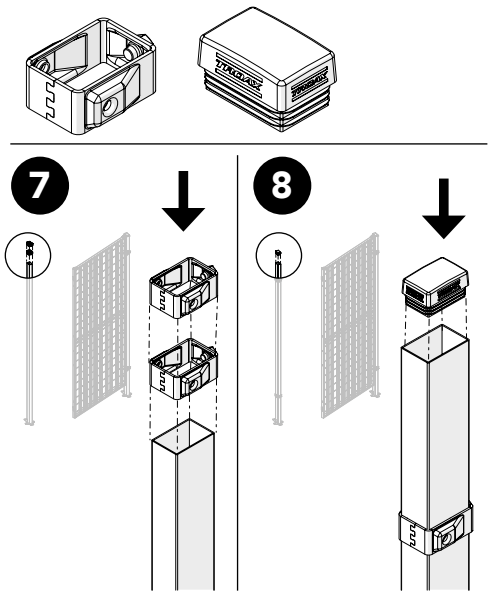

Bag for kit

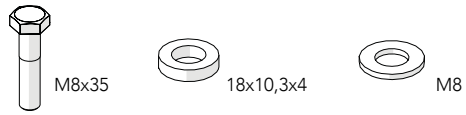

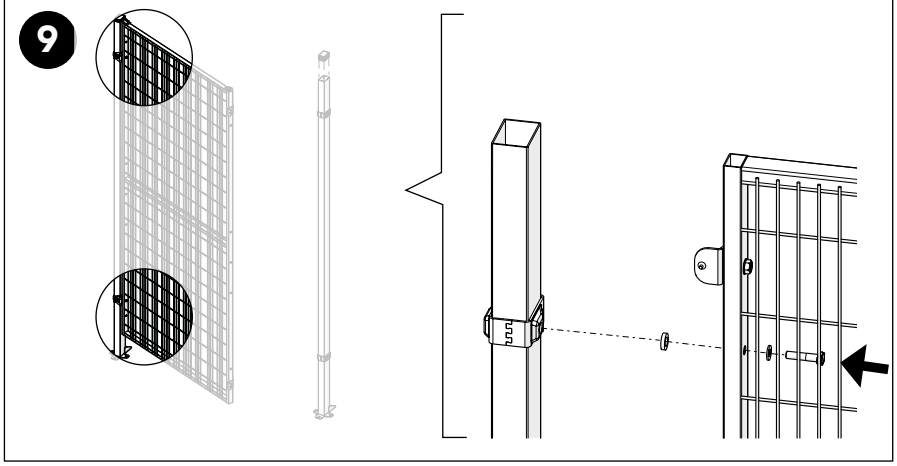

Bag for kit

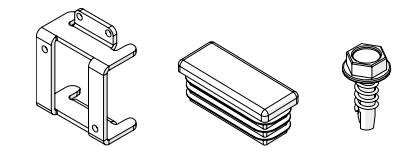

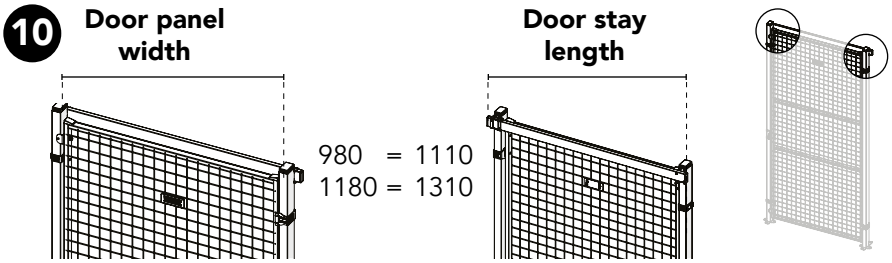

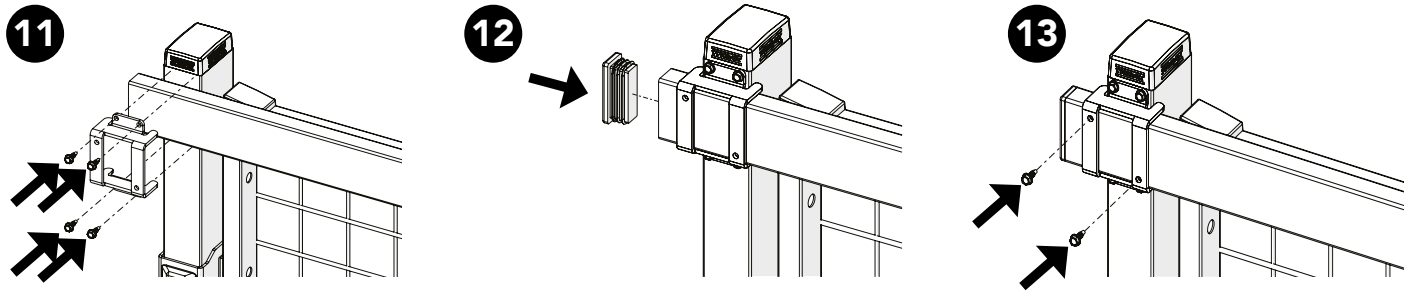

Expander

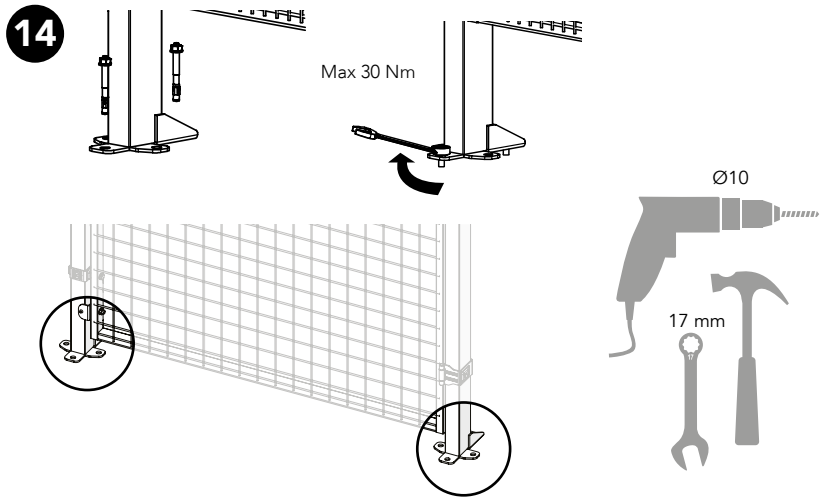

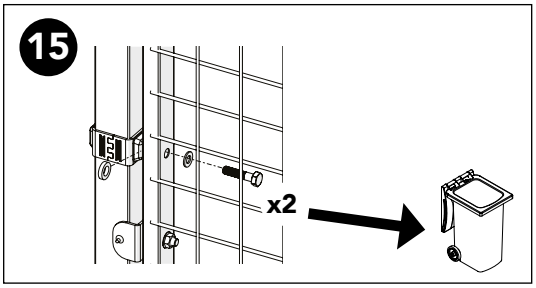

Troax sign

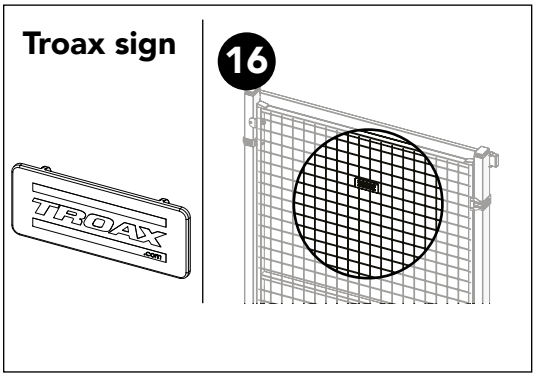

Art no: 88754785 ver. 002

Kit Padlock 60x40 SMF 36907920

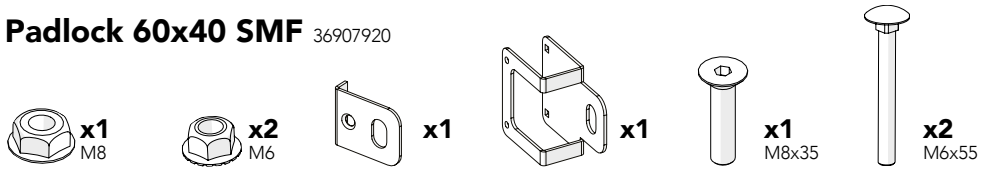

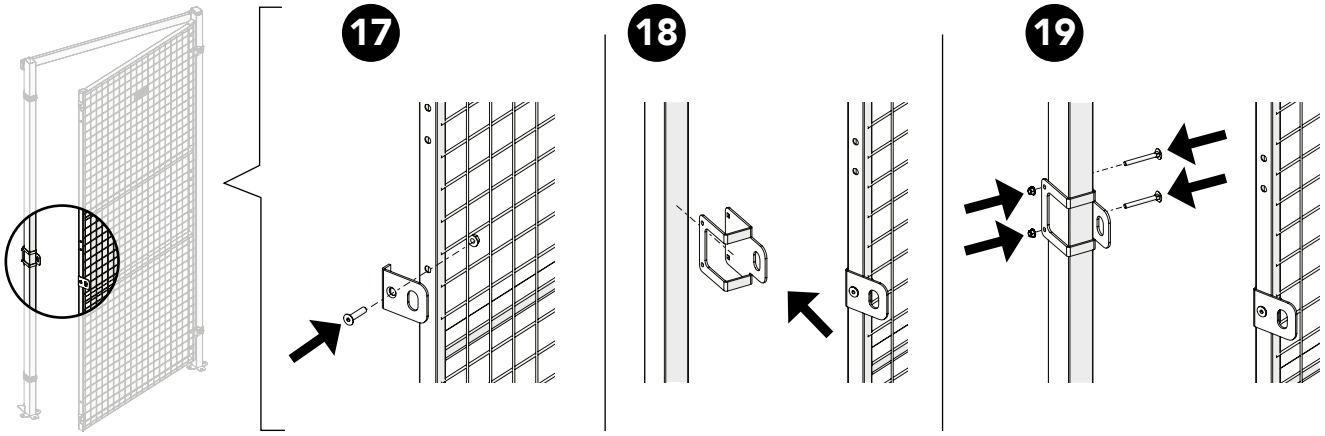

Kit Bracket SMF

M8x28

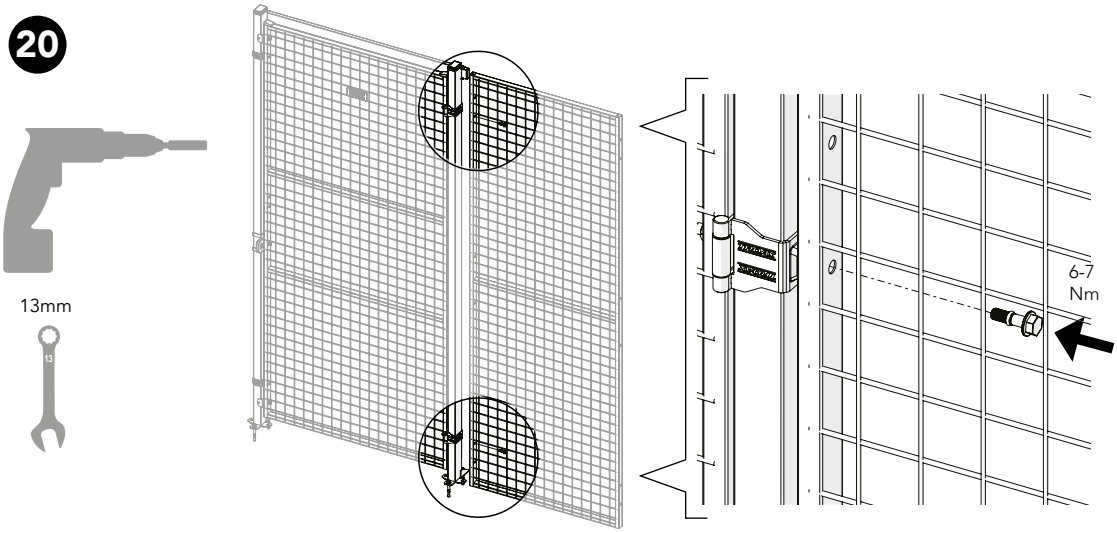

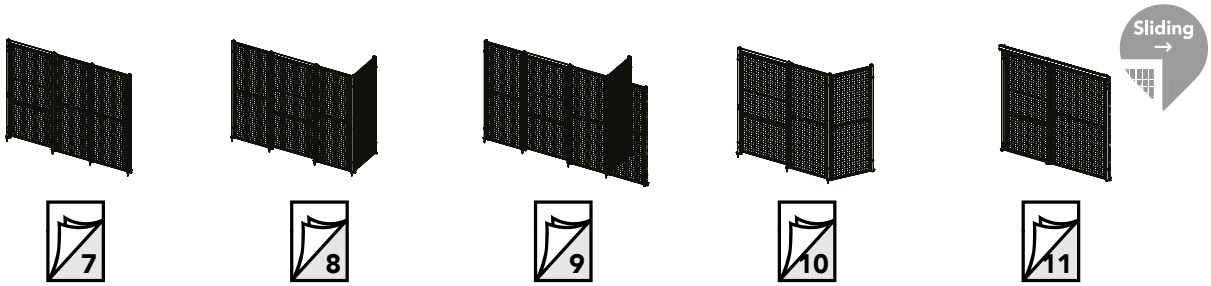

Art no: 88754785 ver. 002

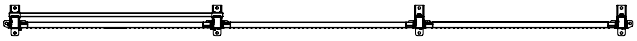

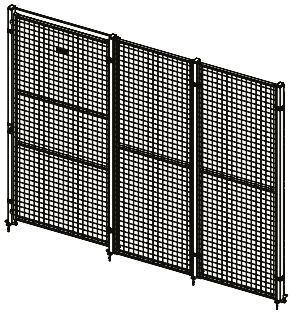

Kit Bracket SMF

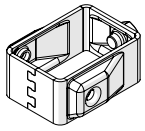

M8x28

21

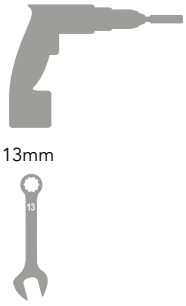

13mm

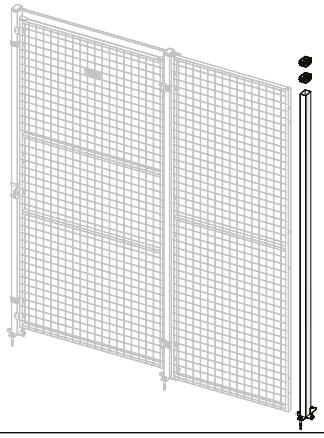

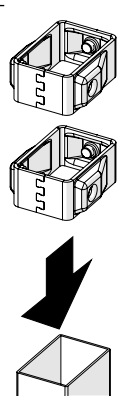

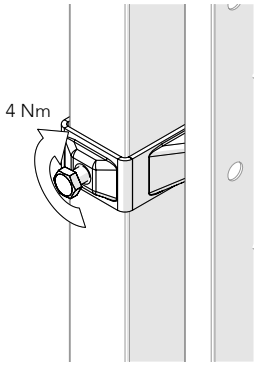

22

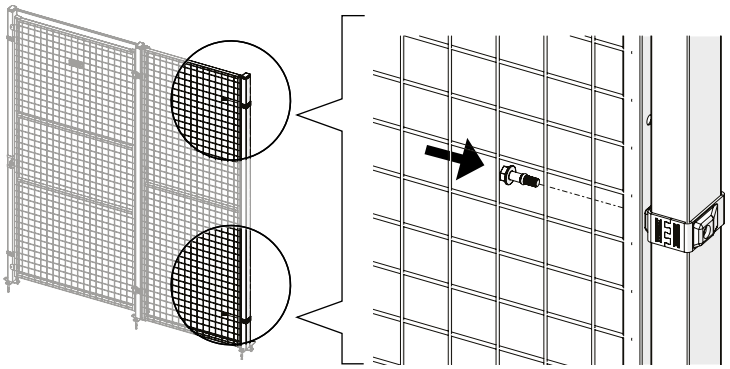

Kit Bracket SMF

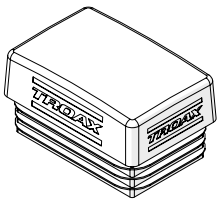

25

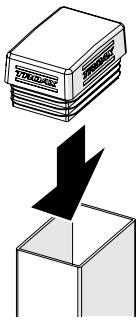

23

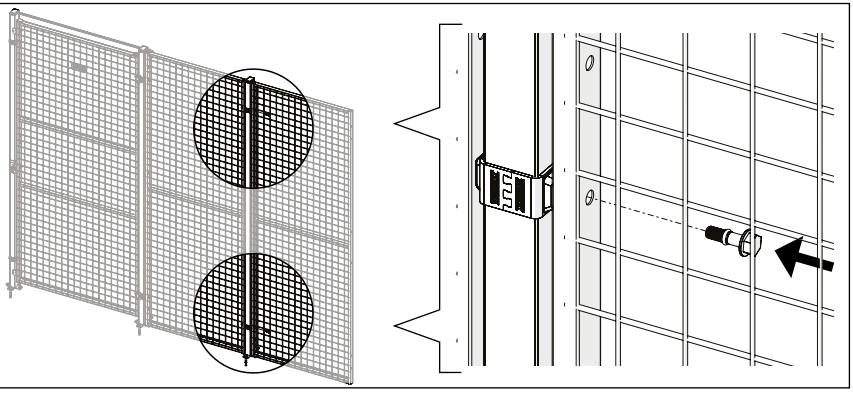

Kit Bracket SMF

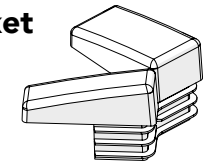

26

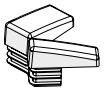

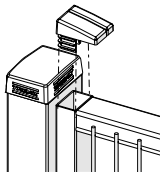

24

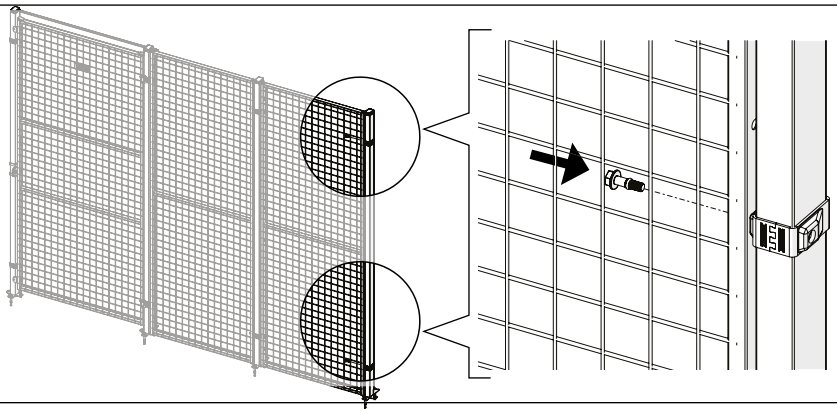

Art no: 88754785 ver. 002

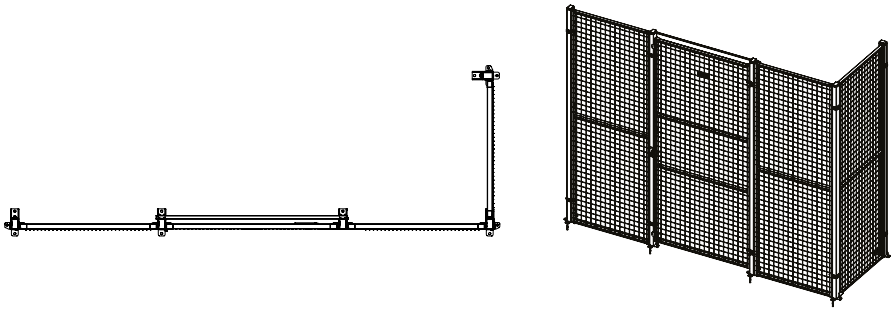

Kit Bracket SMF

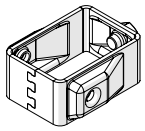

M8x28

21

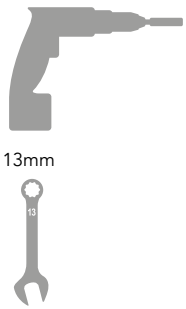

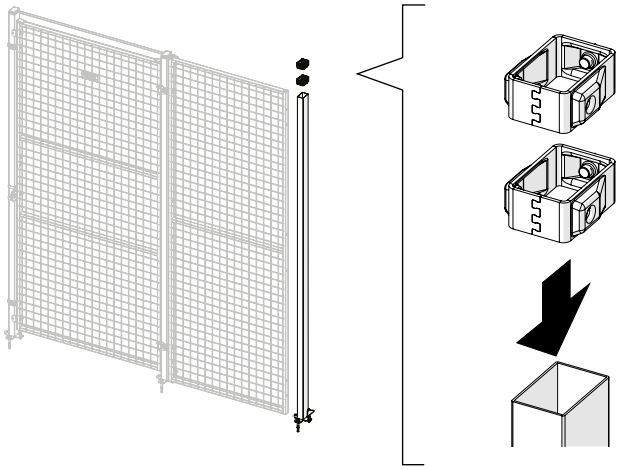

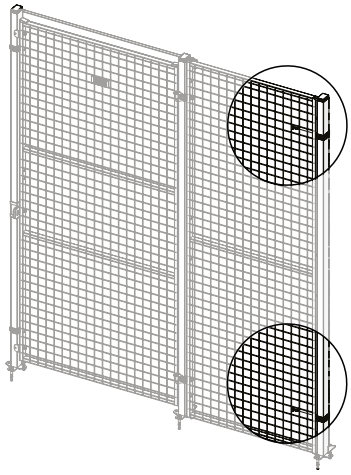

22

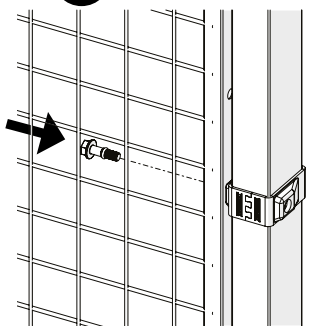

23

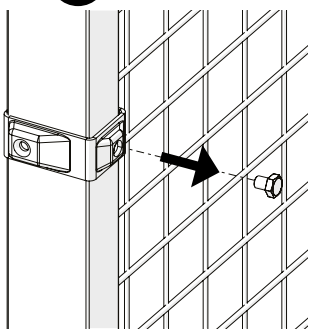

24

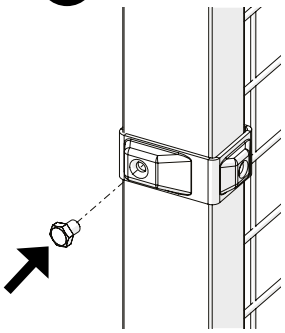

25

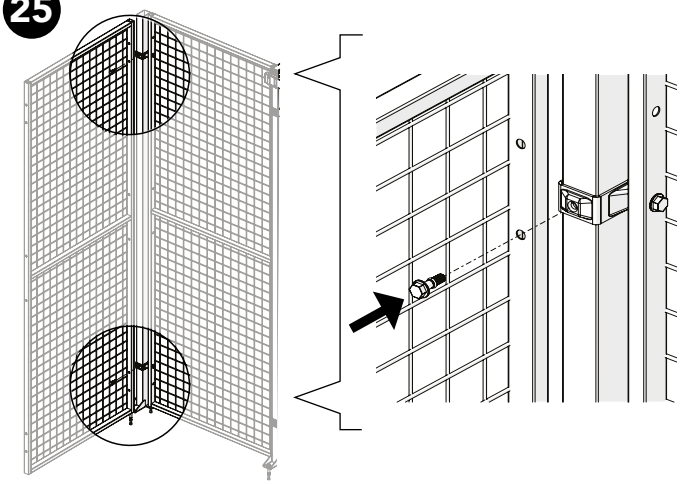

26

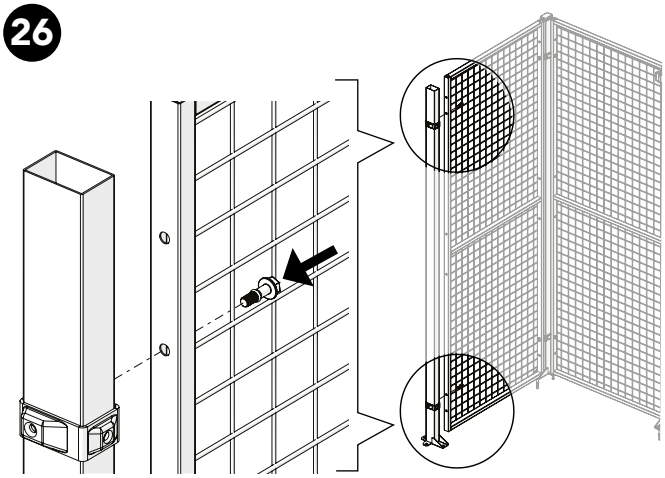

Art no: 88754785 ver. 002

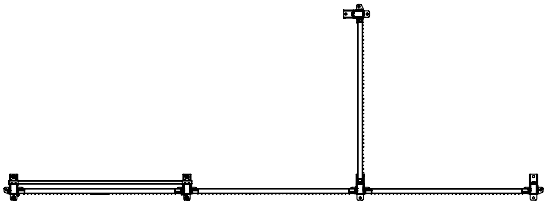

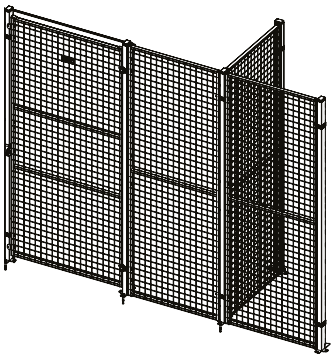

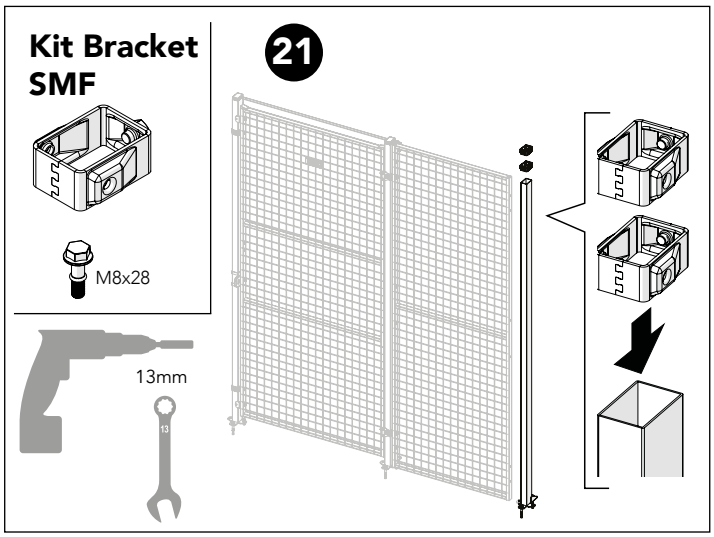

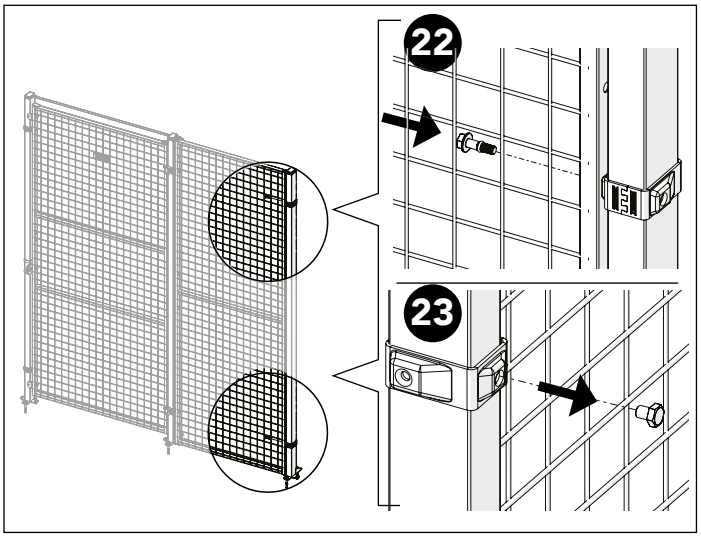

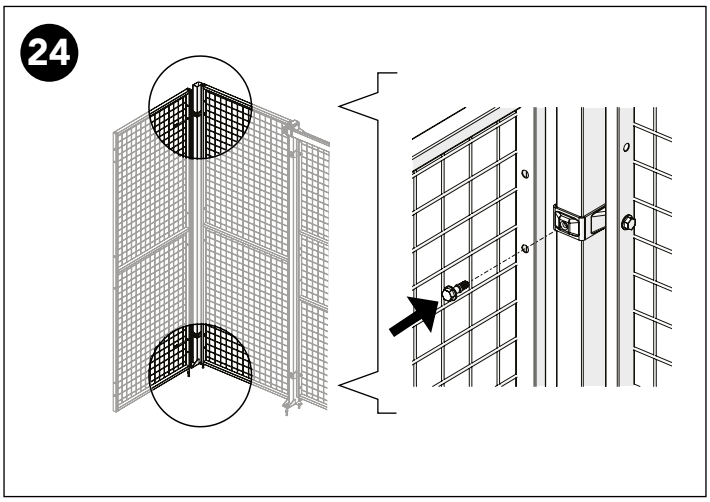

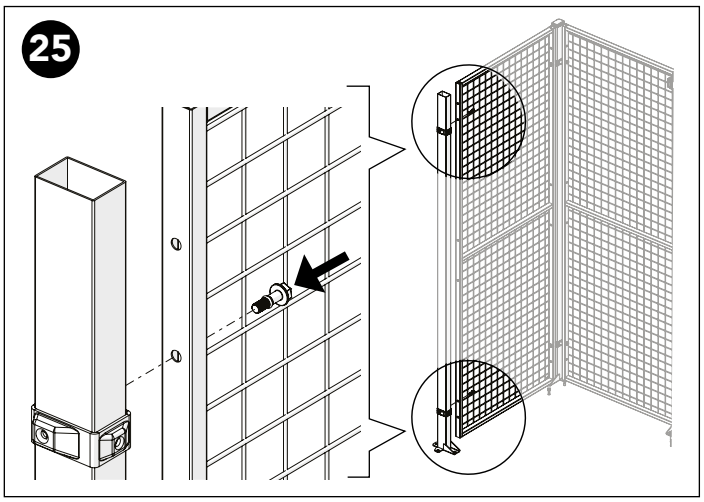

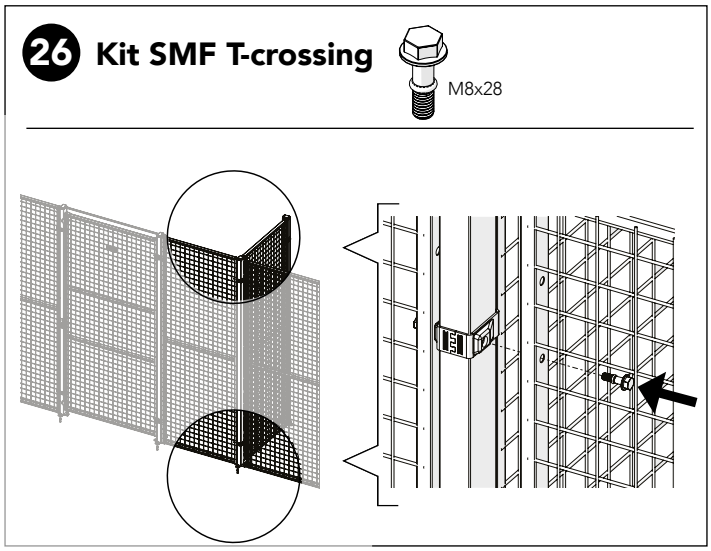

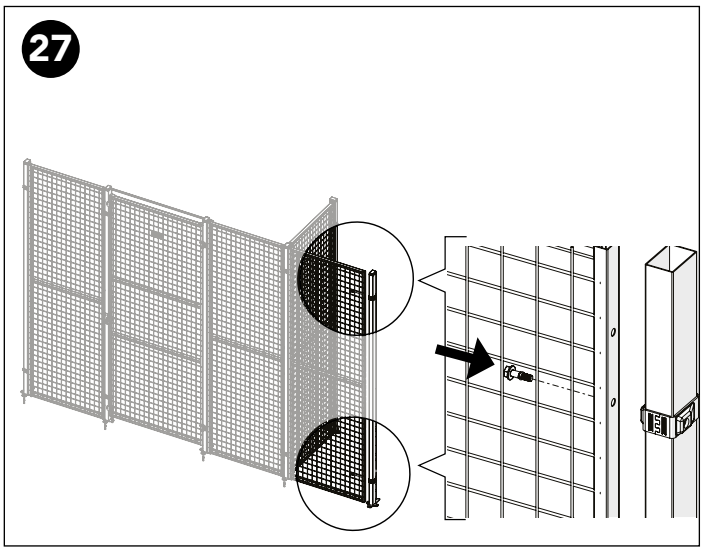

Art no: 88754785 ver. 002

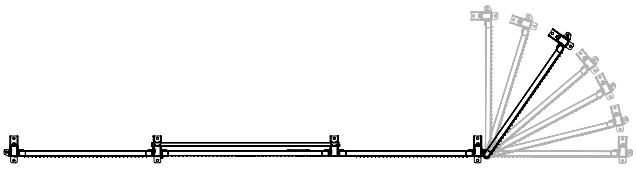

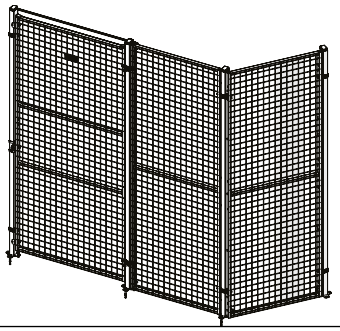

Kit Bracket SMF

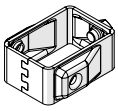

M8x28

21

13mm

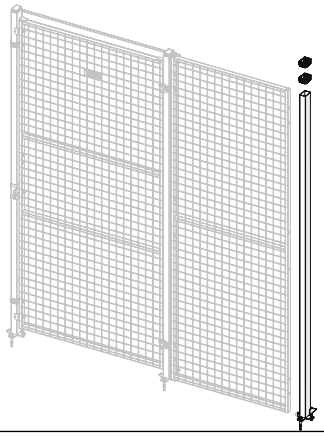

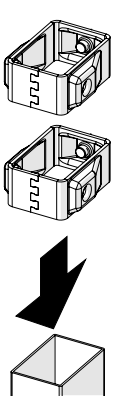

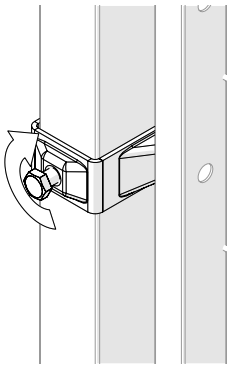

Kit Corner Bracket

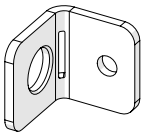

M8x28

M8x12

22

5 mm

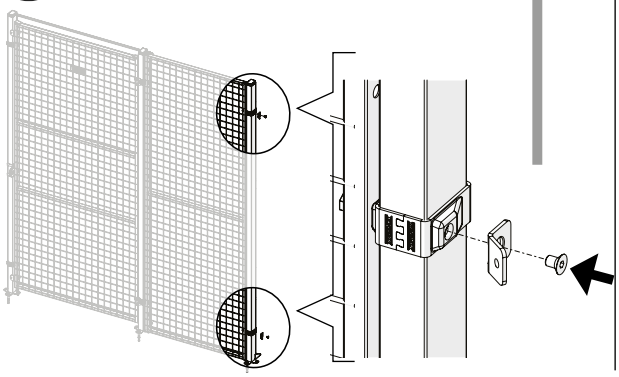

23

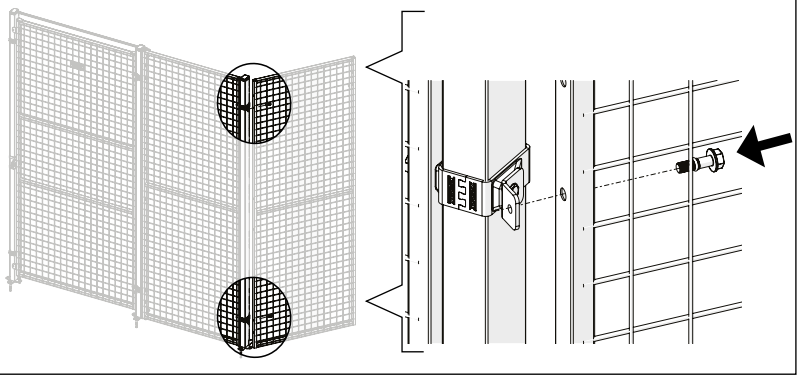

24

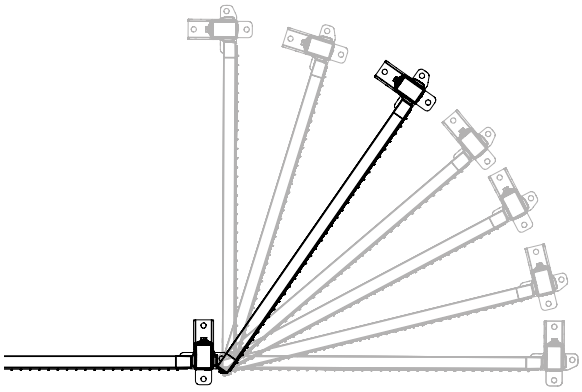

25

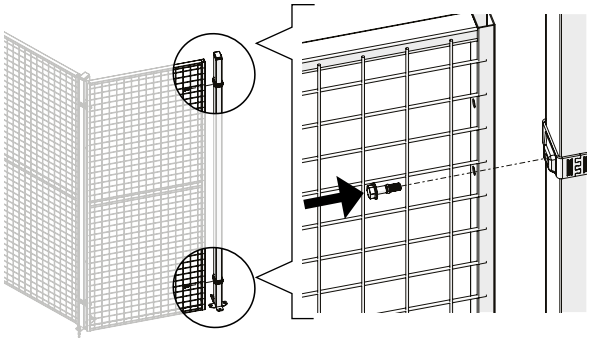

Art no: 88754785 ver. 002

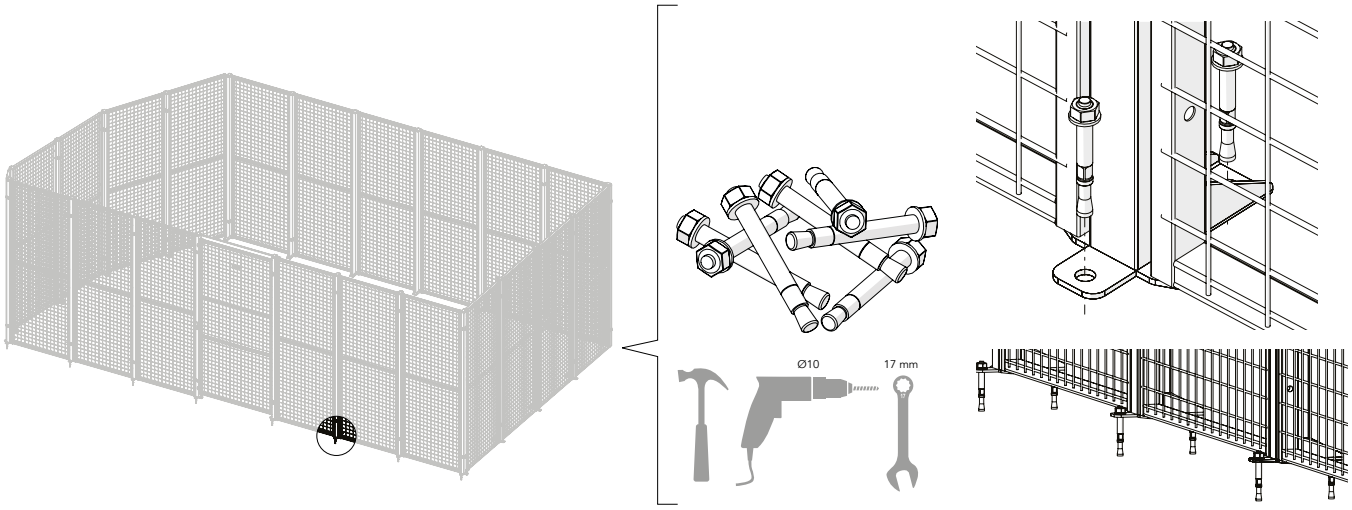

Kit Sliding Door + Kit Bracket SMF

Sliding →

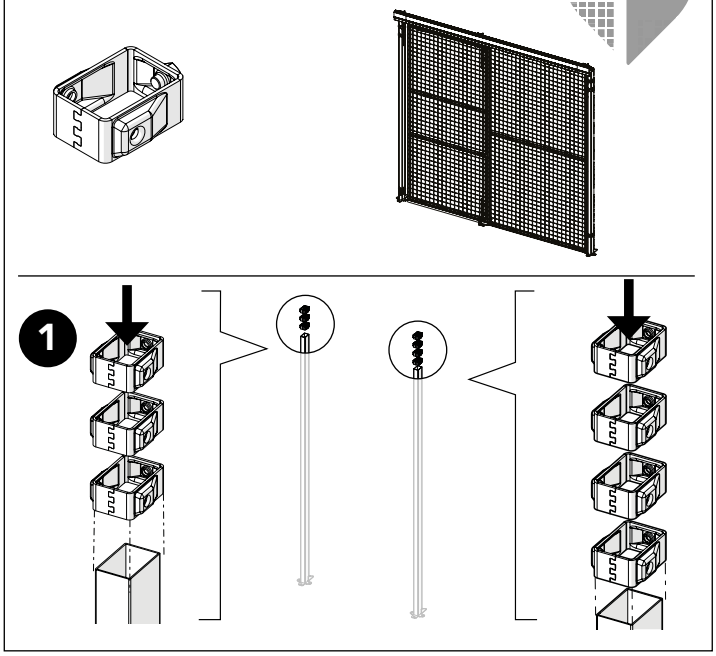

Kit Bracket SMF

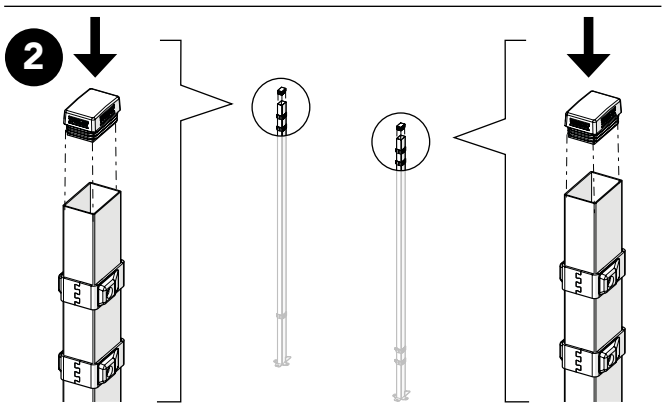

Kit Sliding Door + Bag for kit 5520

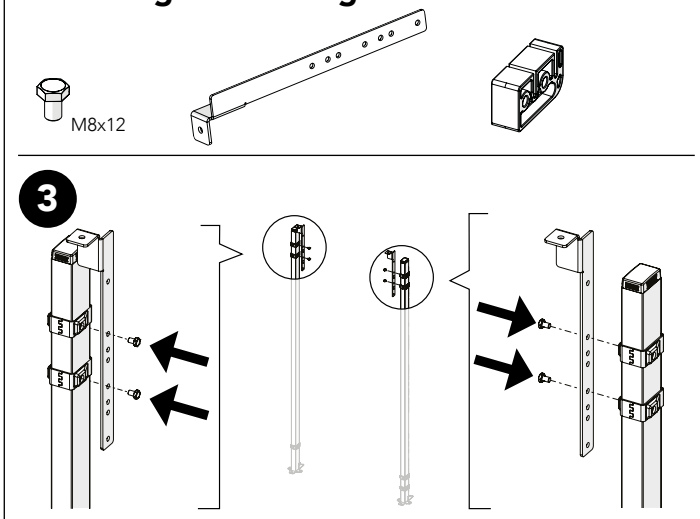

Kit Sliding Door + Bag for kit 5520

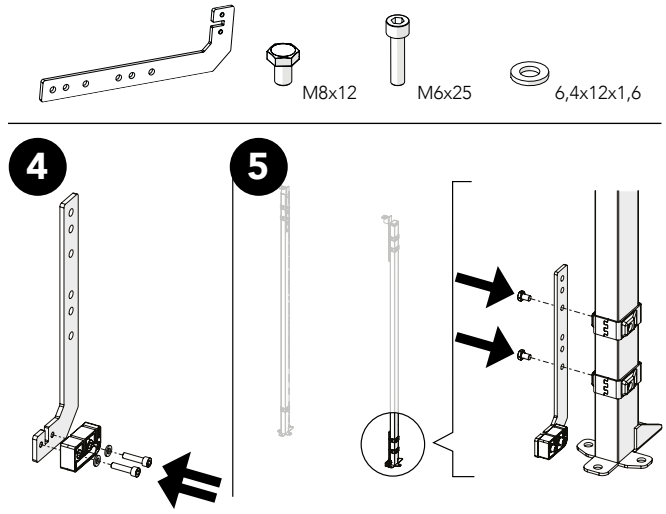

Art no: 88754785 ver. 002

Bag for kit 5520

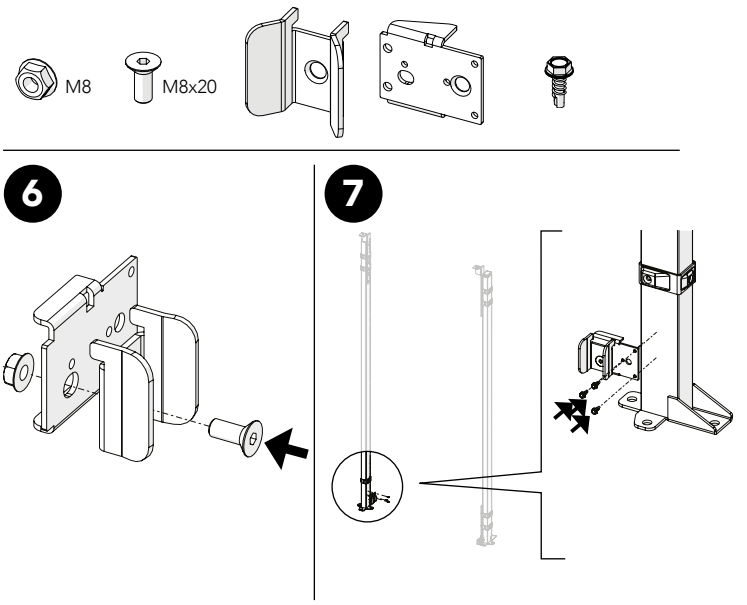

Kit Bracket SMF

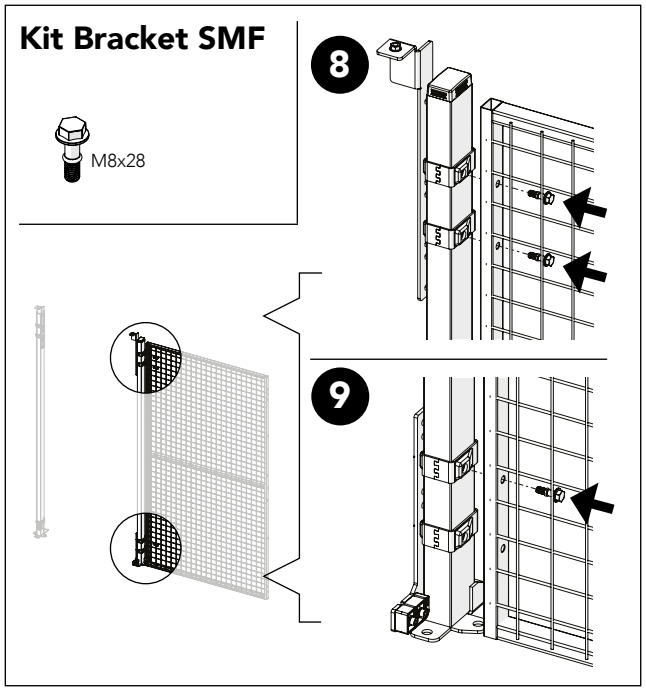

Kit Sliding Door + Bag for kit 5520

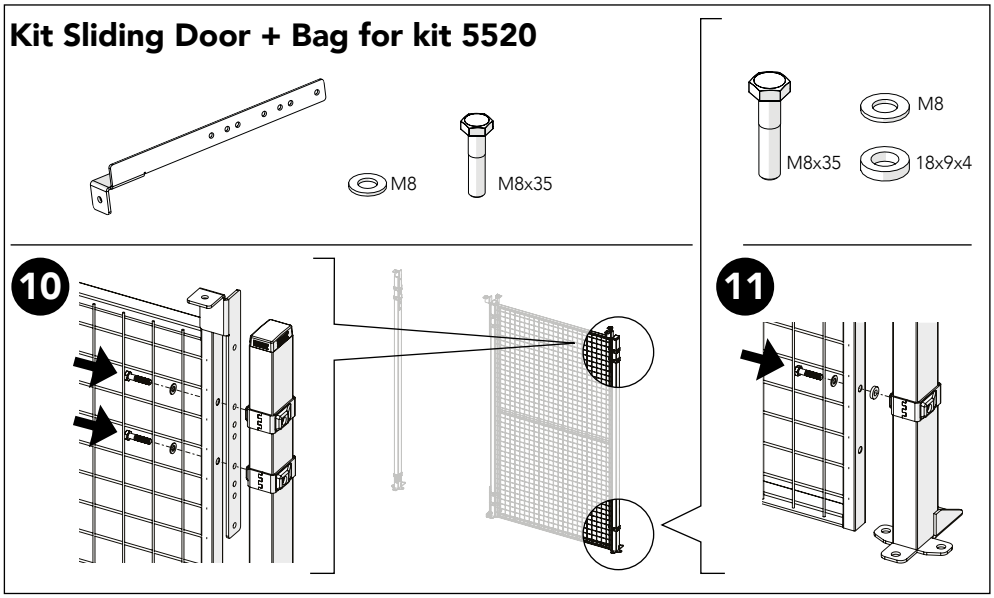

Kit Bracket SMF

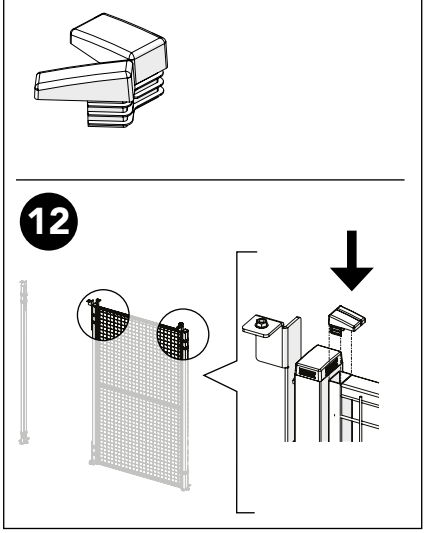

Bag for kit 5520

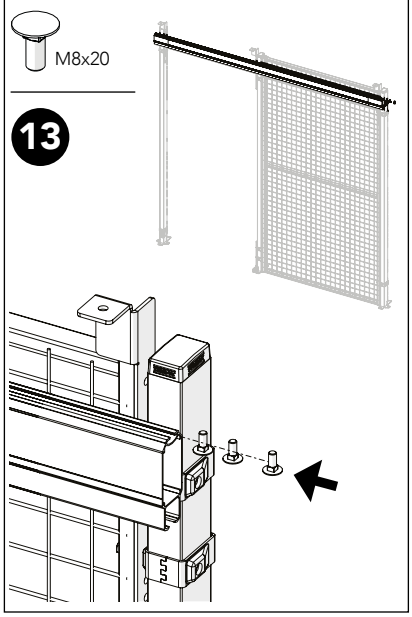

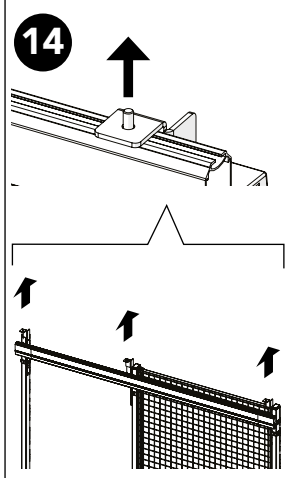

Bag for kit 5520

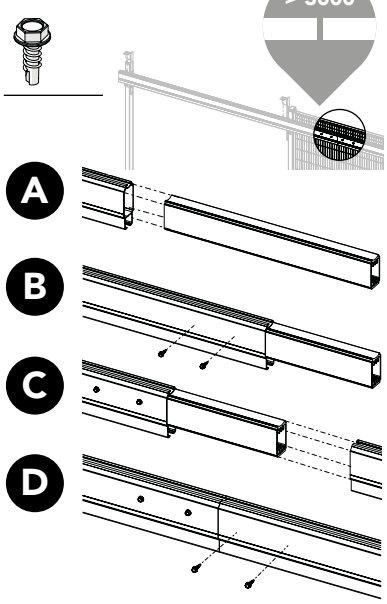

Bag for kit 5520

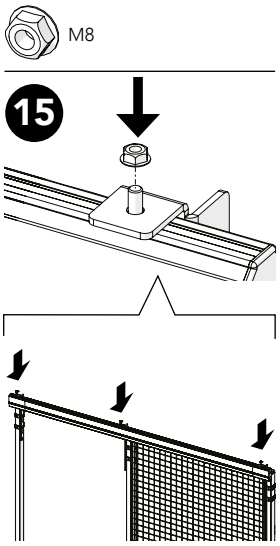

Art no: 887547 85 ver. 002

Bag for kit 5520

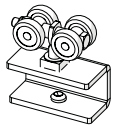

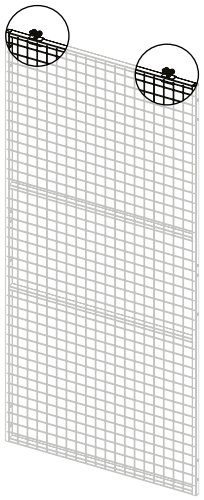

16

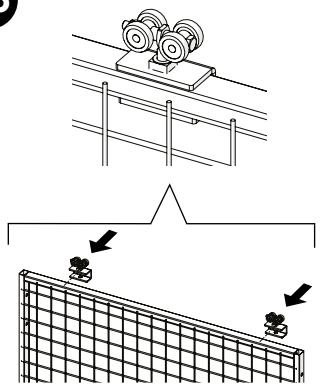

Bag for kit 5520

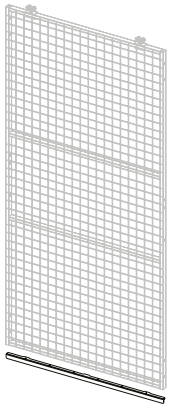

17

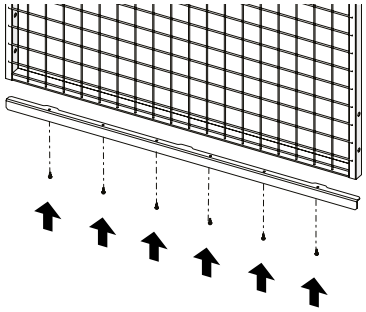

18

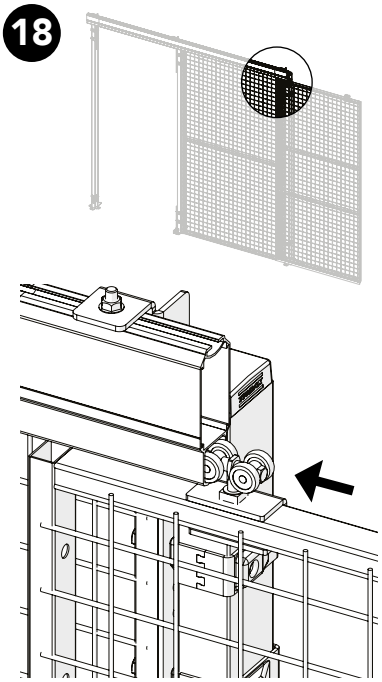

Bag for kit 5520

19

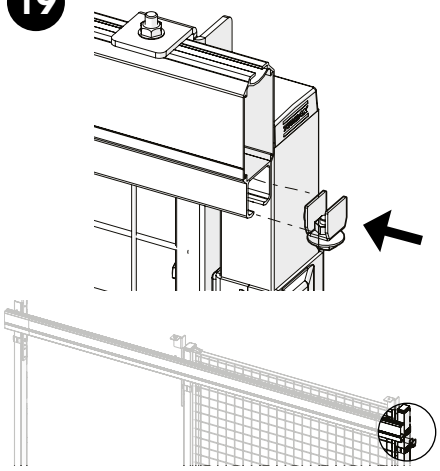

Bag for kit 5520

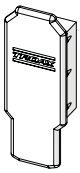

20

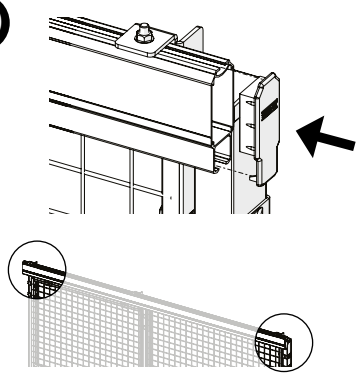

Troax Sign

21

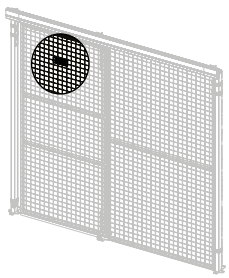

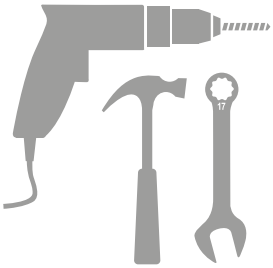

21

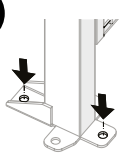

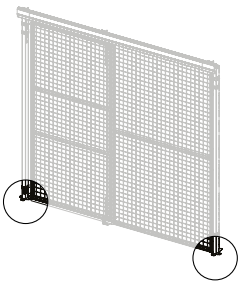

22

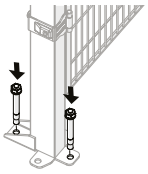

Art no: 88754785 ver. 002