ASSEMBLY INSTRUCTION
– JUST FOLLOW ME

PANIC BAR SAFE ESCAPE LOCK

3D
INTERACTIVE
ASSEMBLY
INSTRUCTION

KIT 36905460

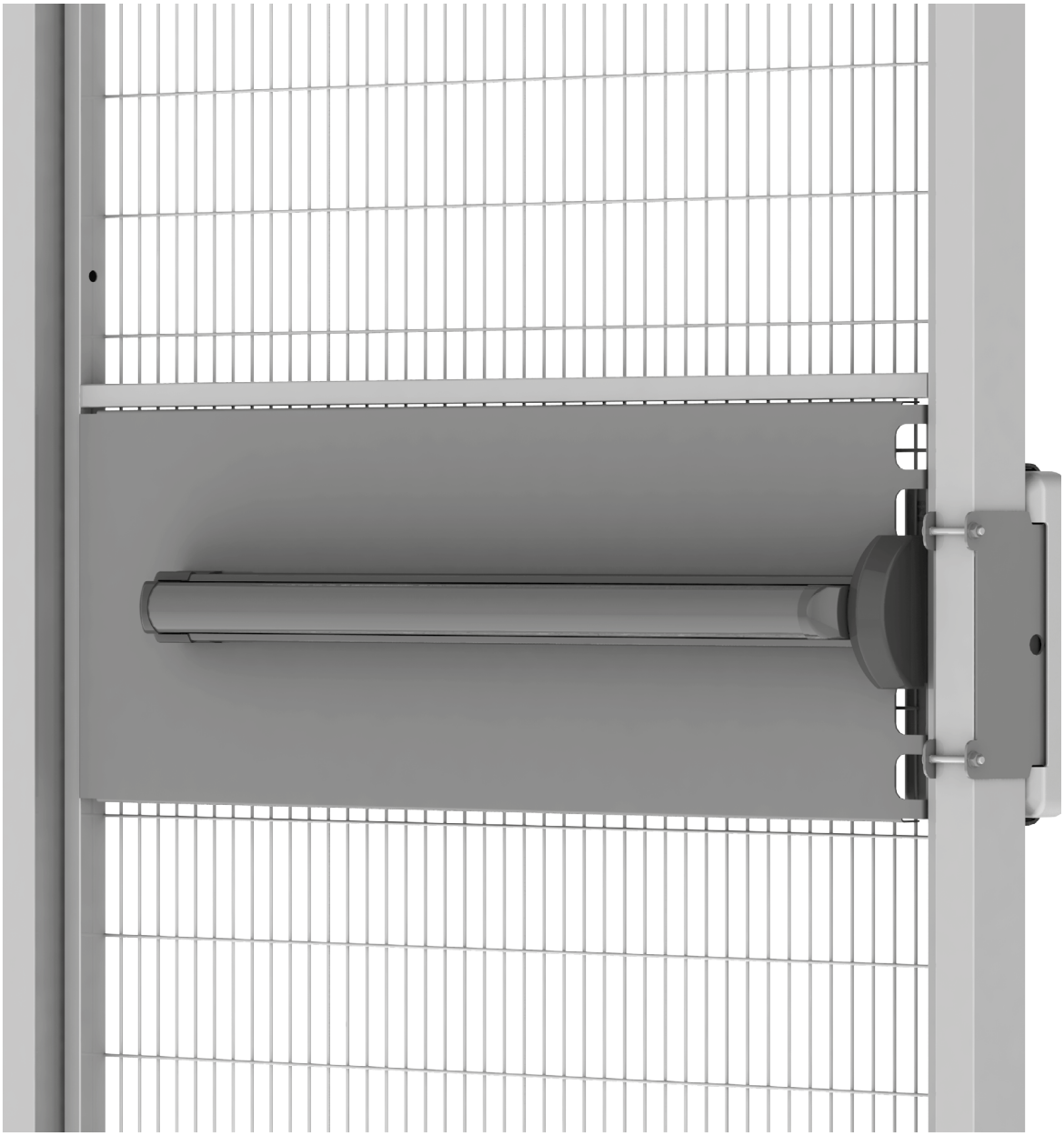

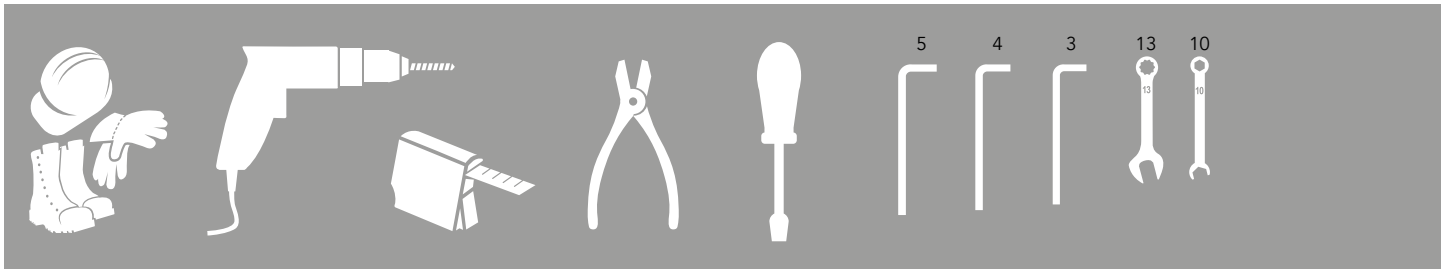

Kit Panic Bar Safe Escape Lock 36905460

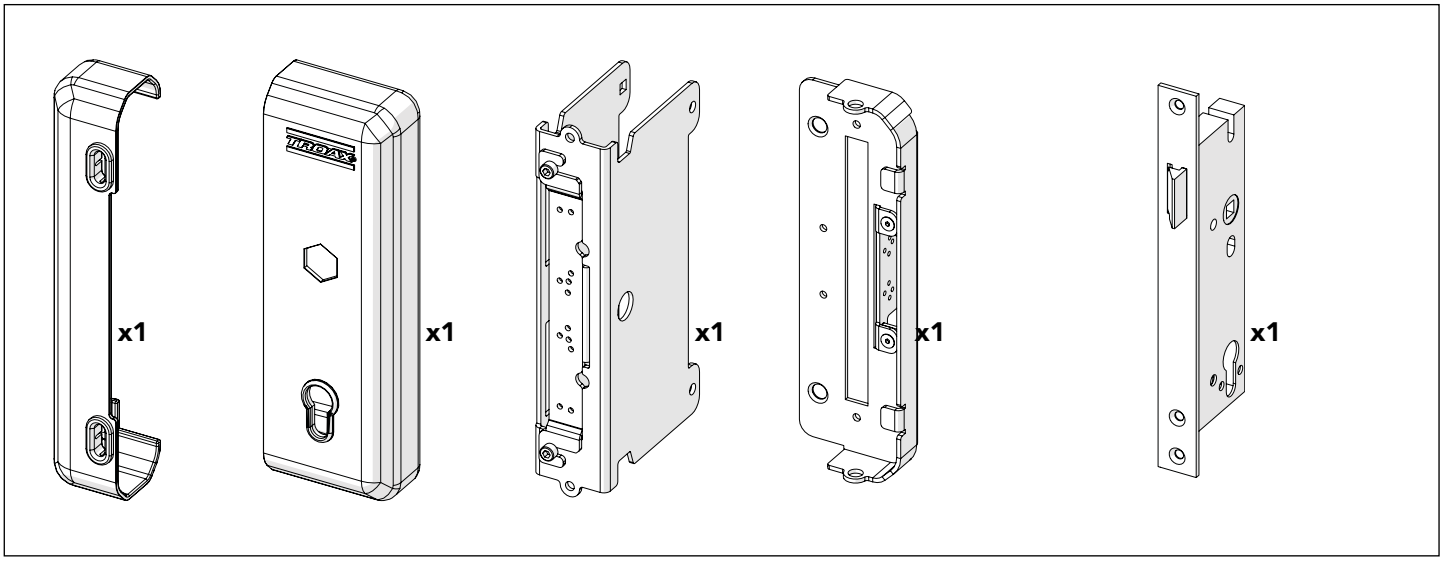

Bag for Safe Escape Lock Single 88650325

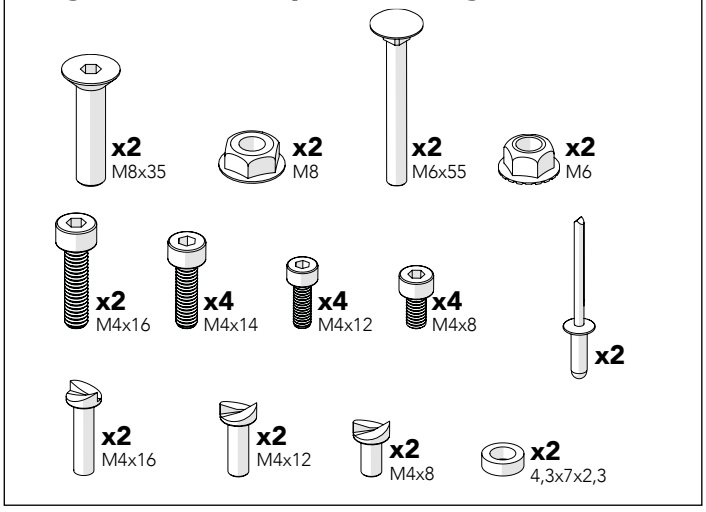

Bag Panic Bar Safe Escape Lock 88695460

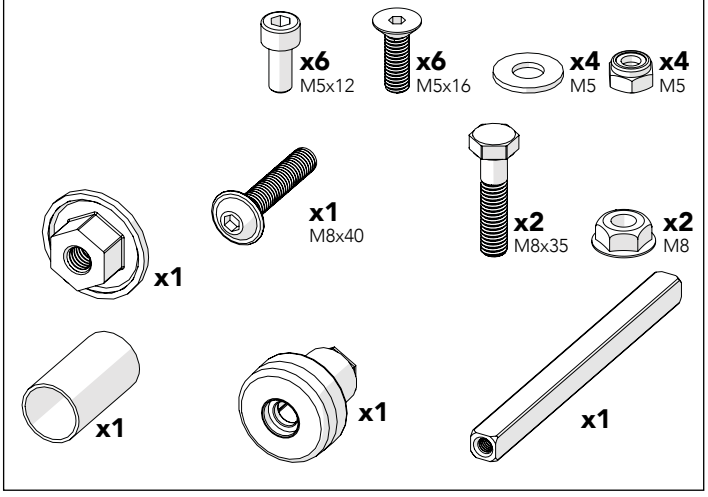

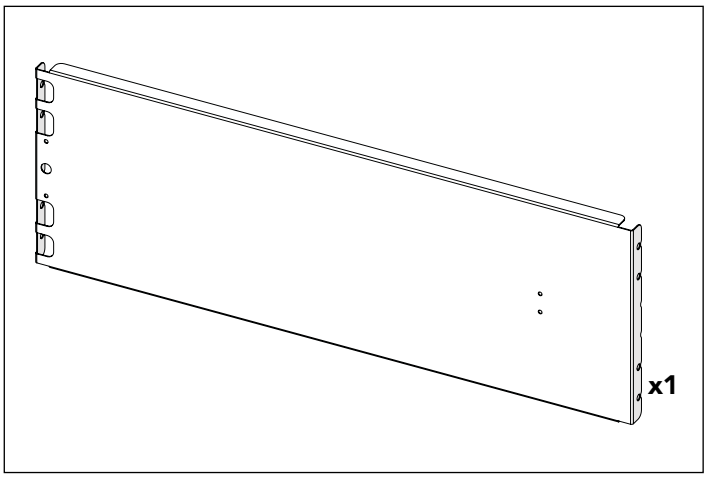

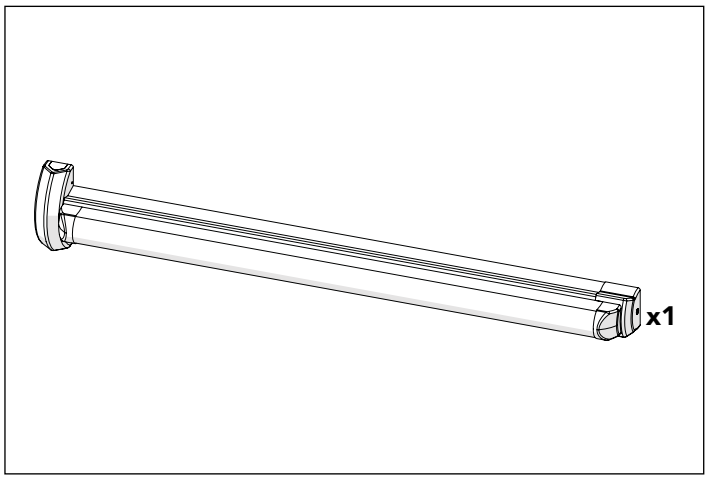

Art no: 88755460 ver. 002

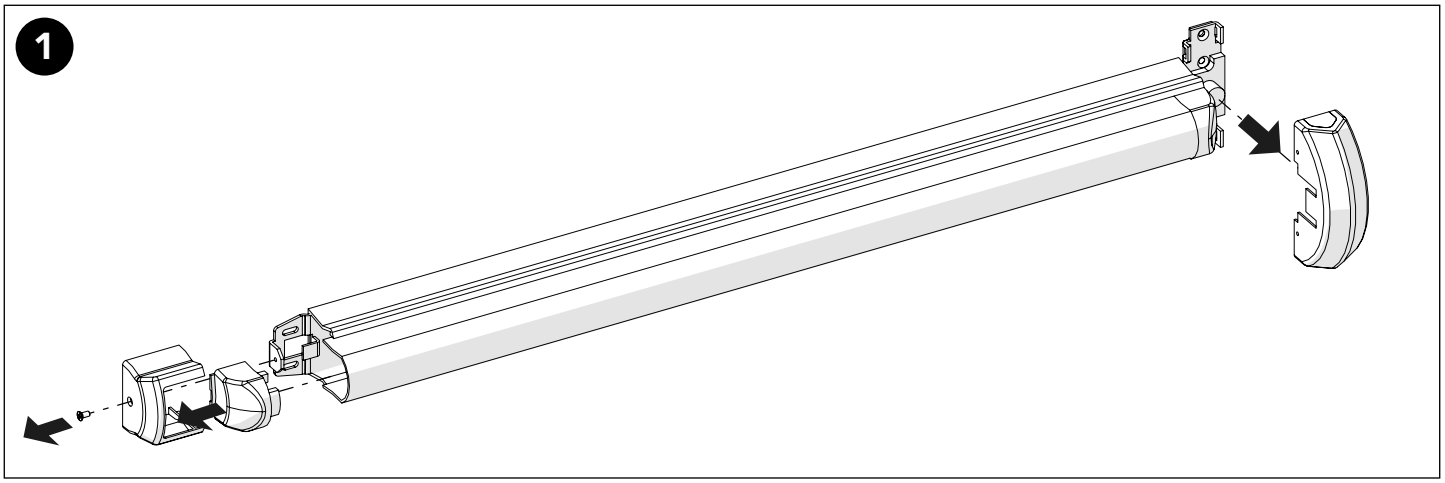

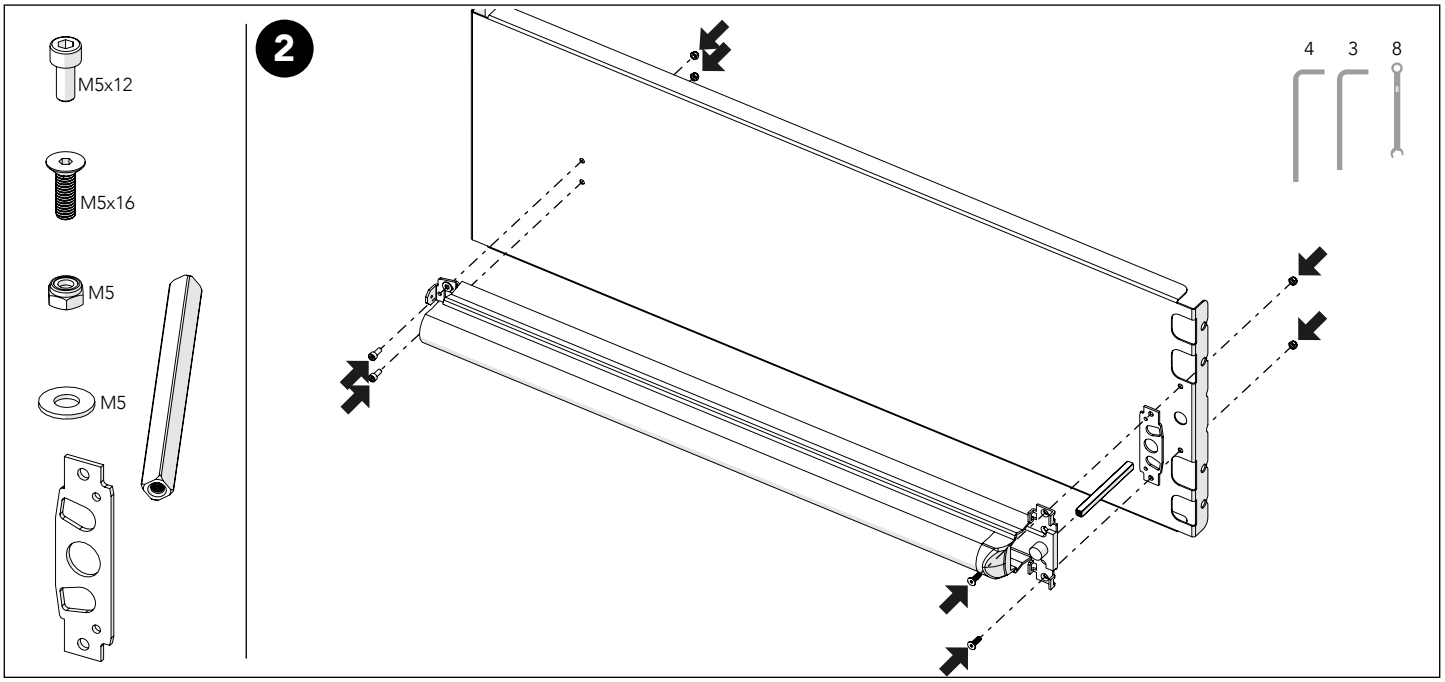

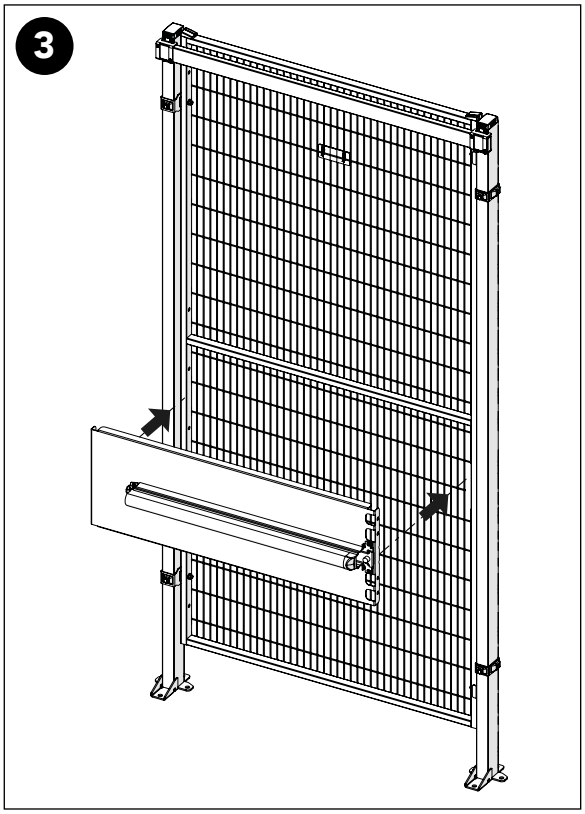

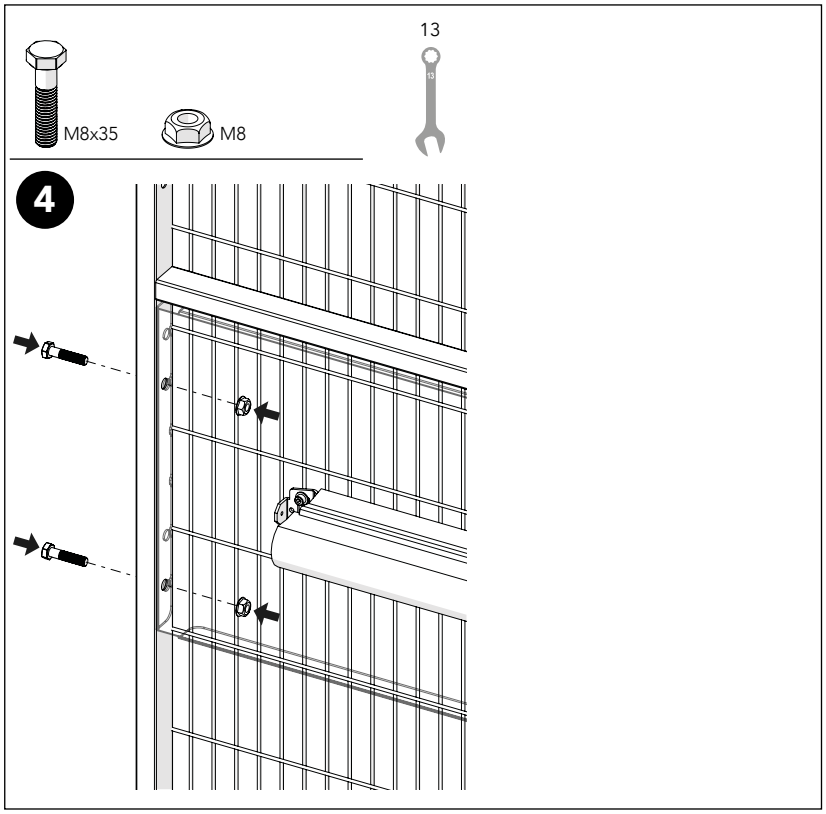

Art no: 88755460 ver. 002

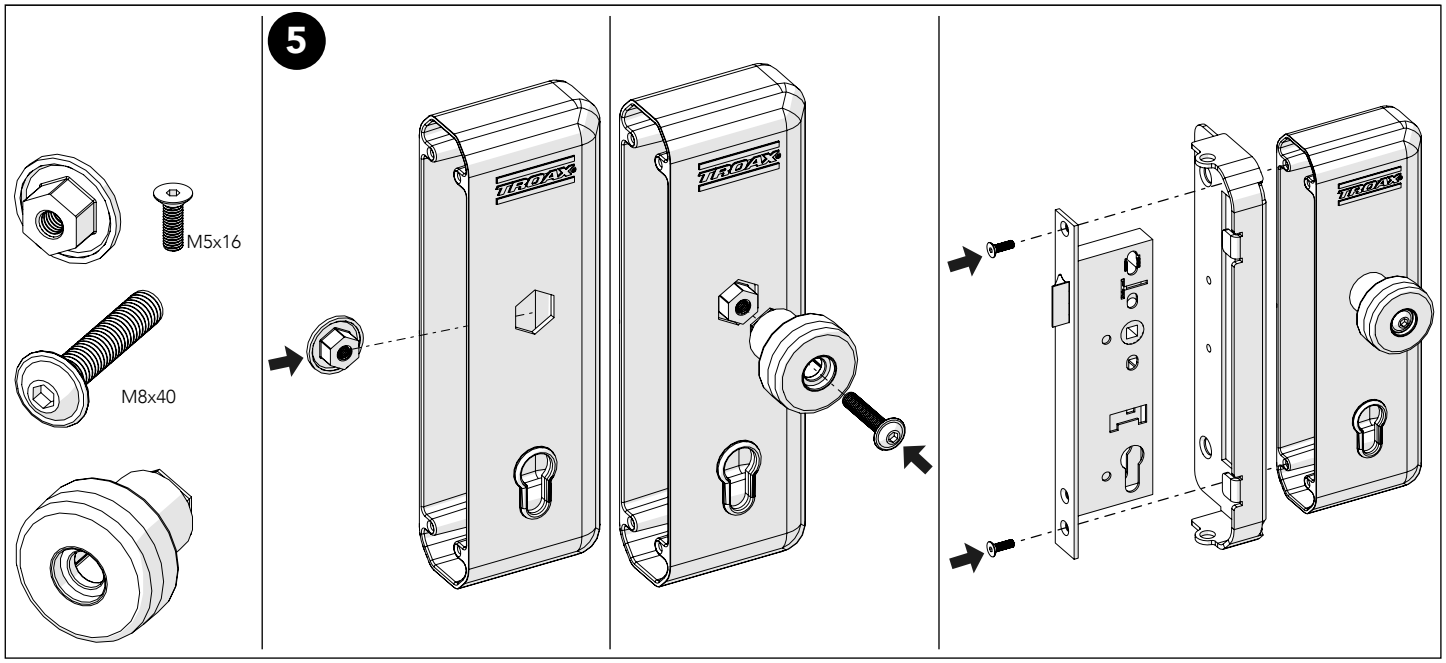

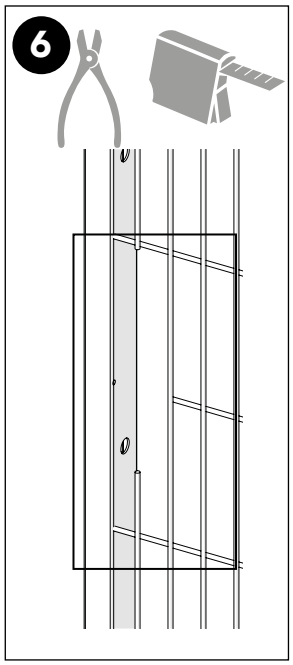

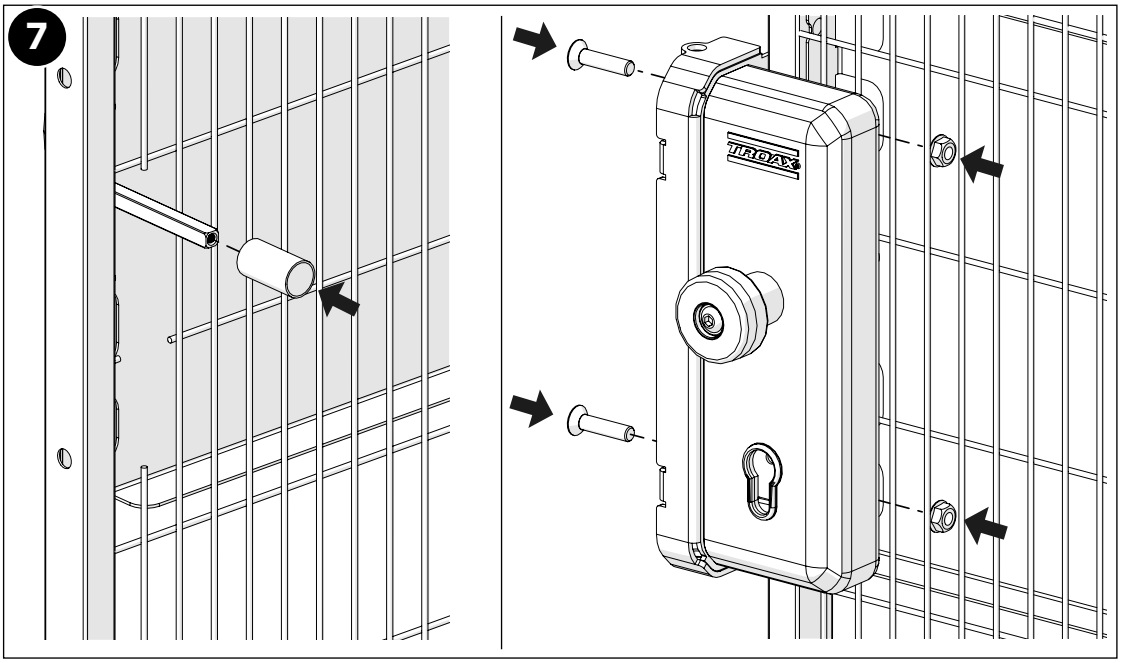

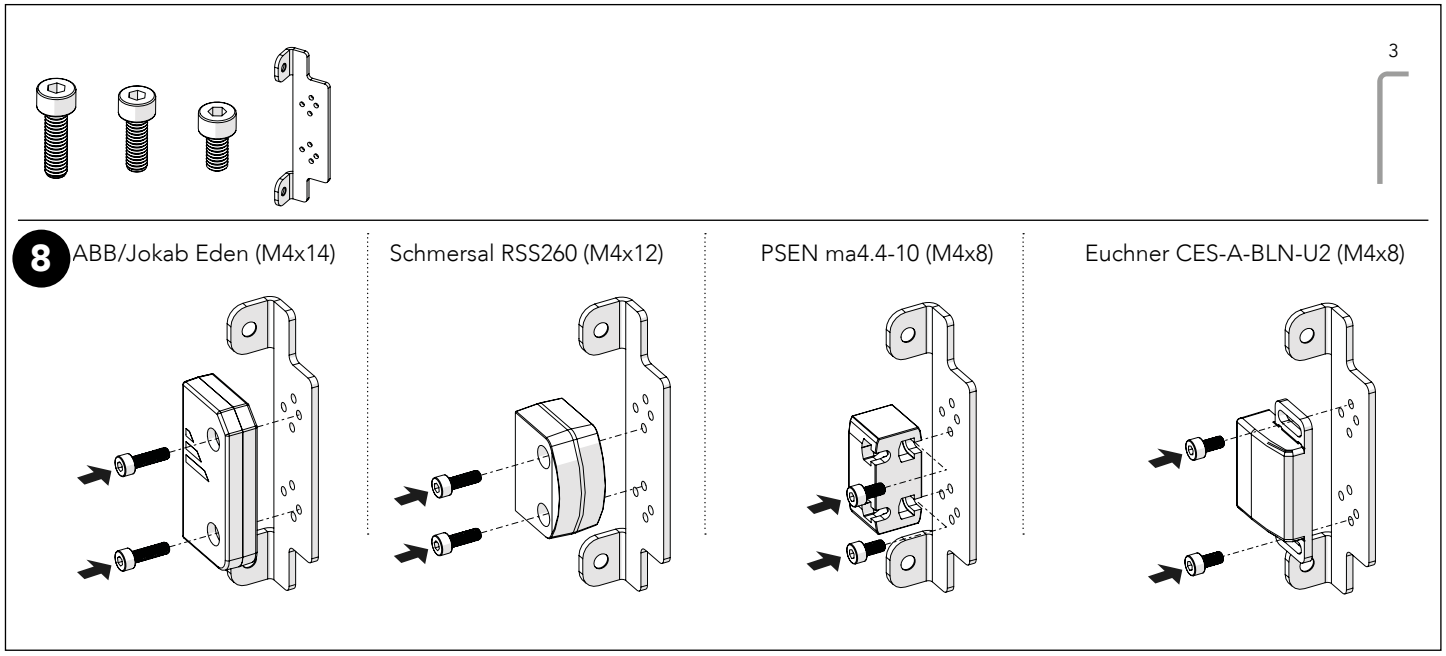

Art no: 88755460 ver. 002

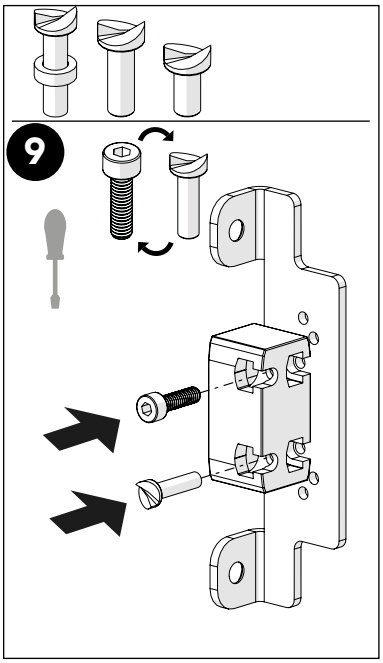

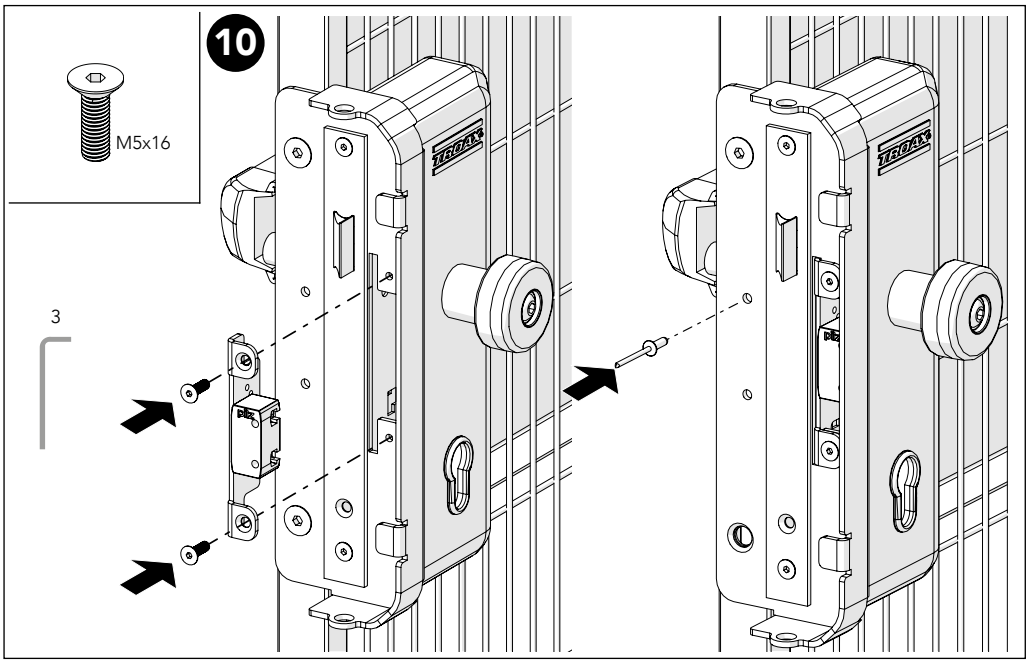

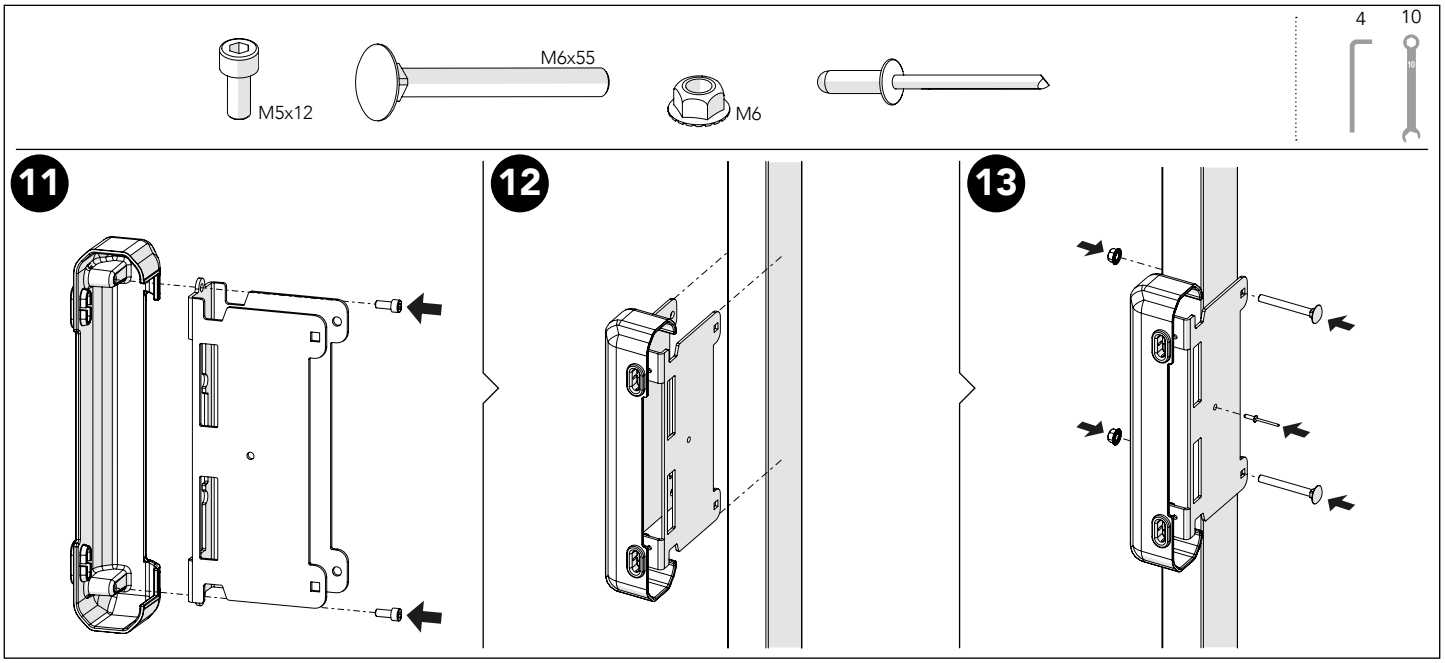

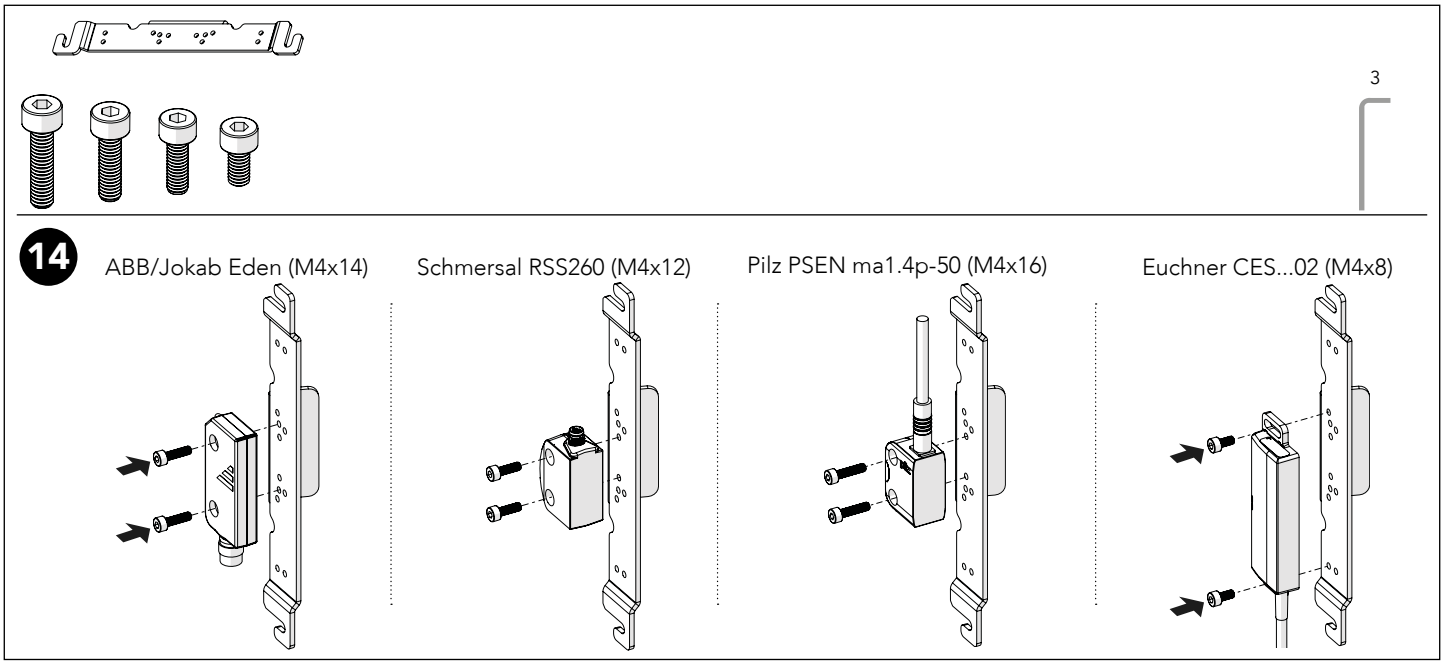

Art no: 88755460 ver. 002

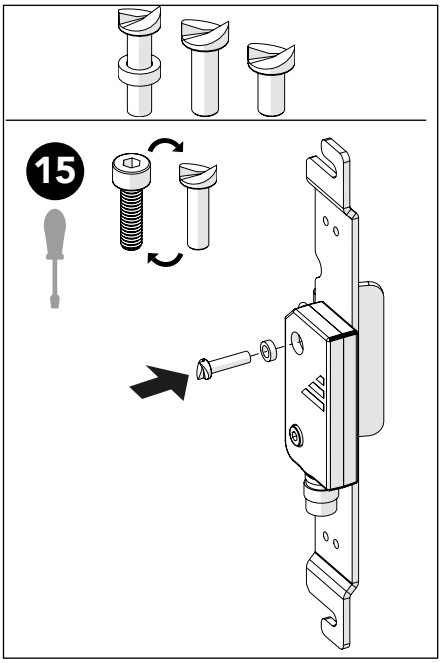

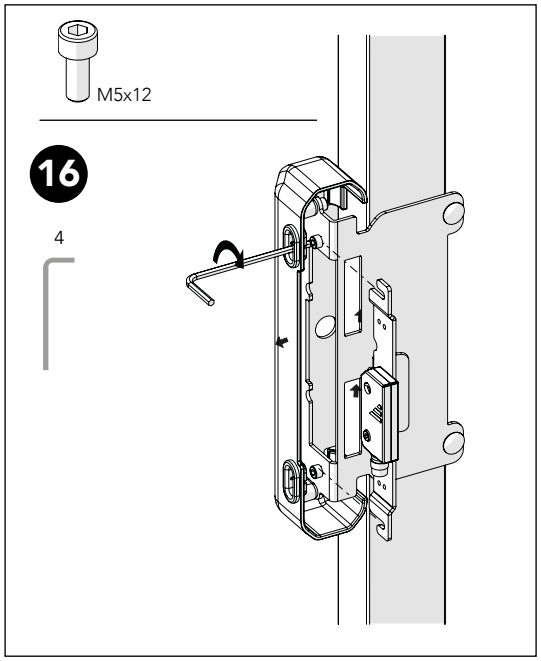

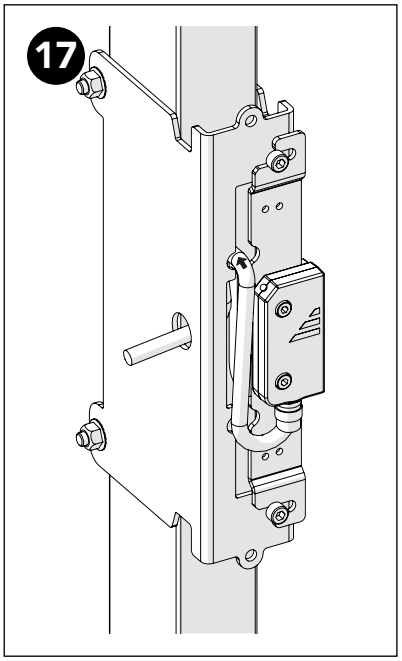

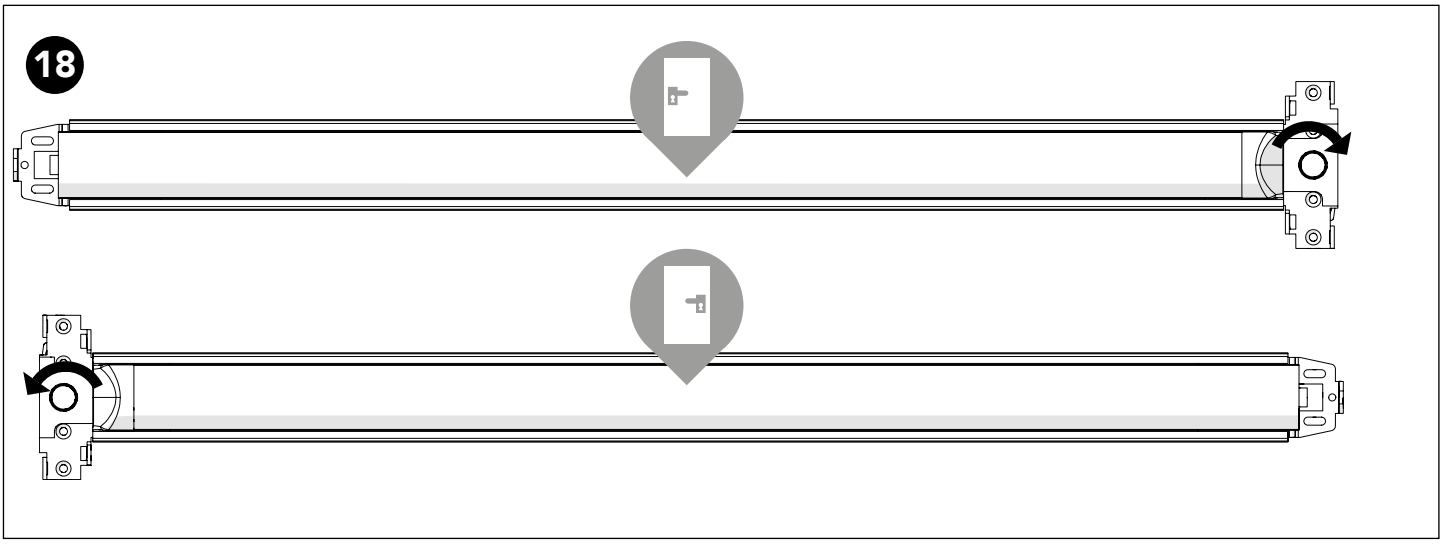

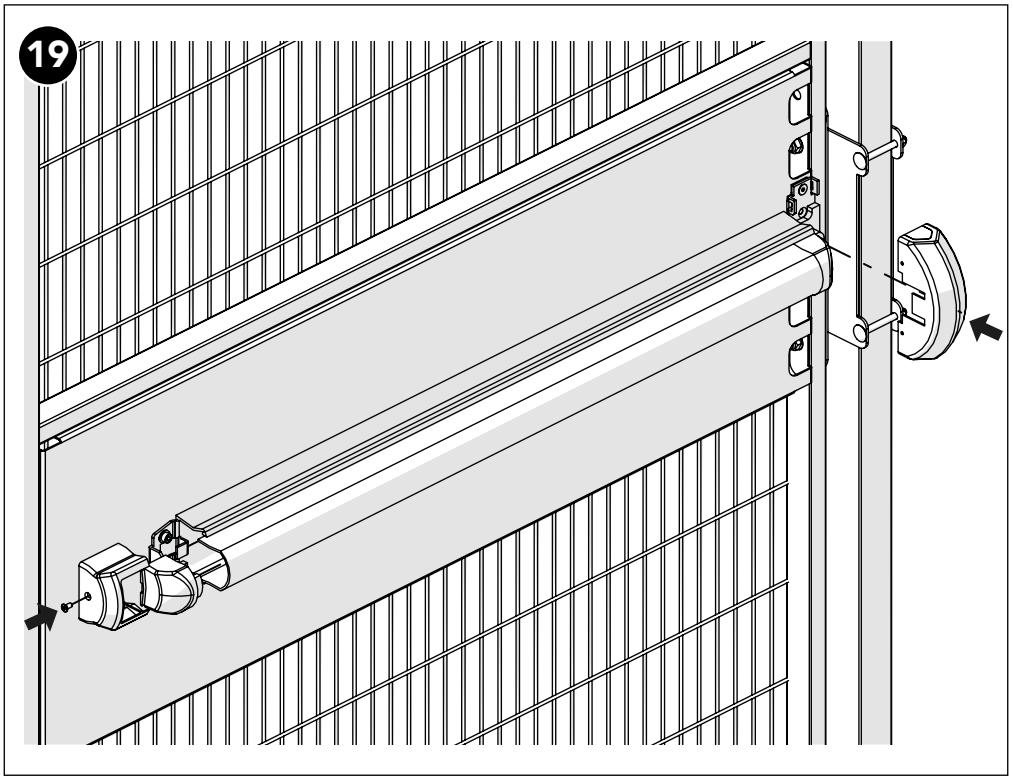

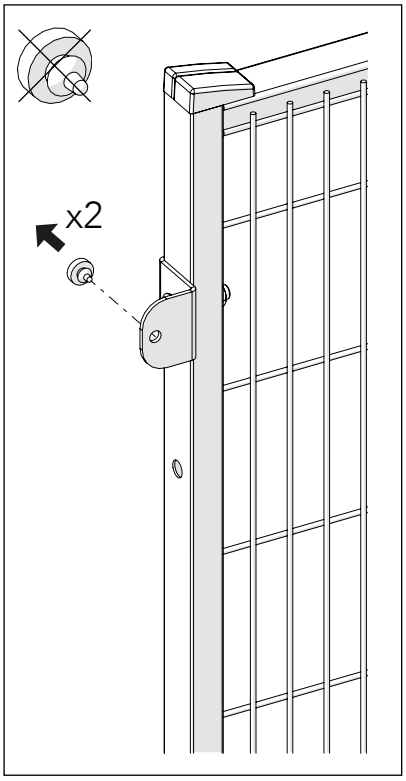

Art no: 88755460 ver. 002