ASSEMBLY INSTRUCTION
– JUST FOLLOW ME

SAFE ESCAPE LOCK SINGLE HINGED

3D
INTERACTIVE
ASSEMBLY
INSTRUCTION

KIT 36905861/62, 36905871/72

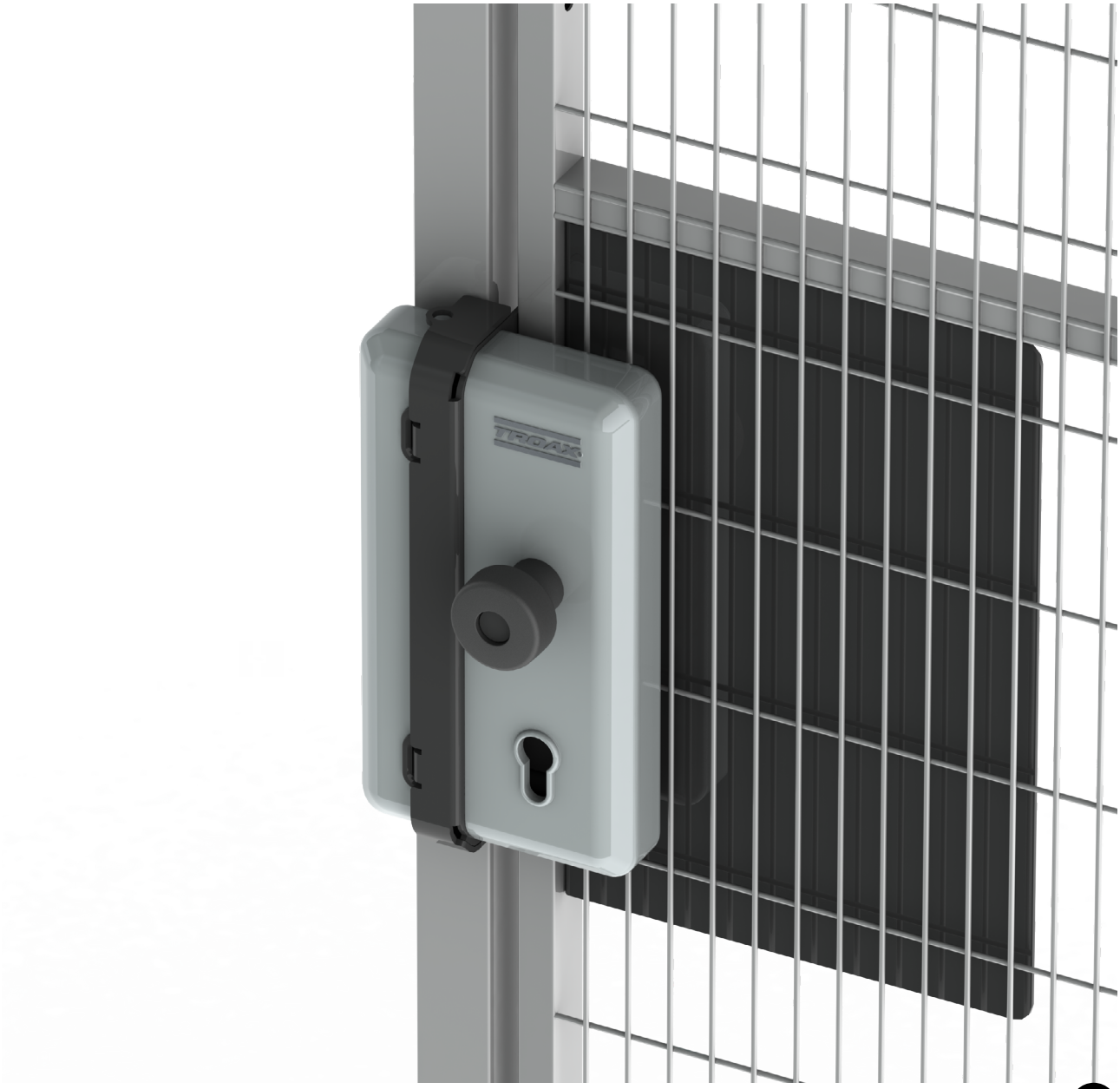

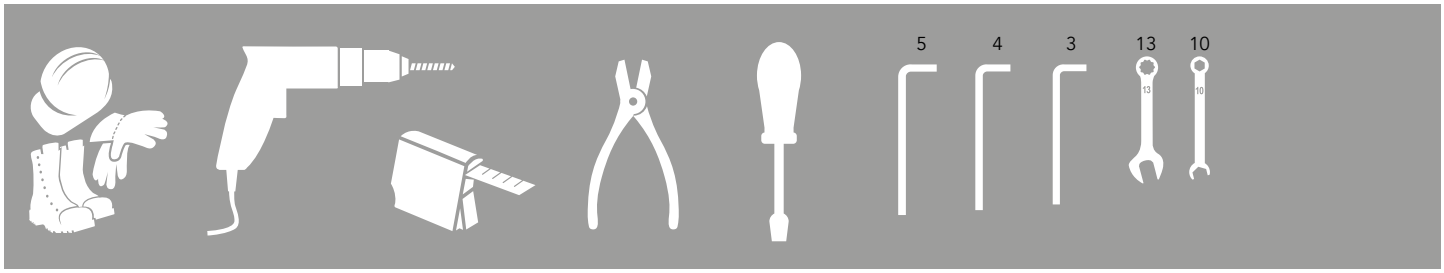

Kit Safe Escape Lock

Bag for Safe Escape Lock Single 88650325

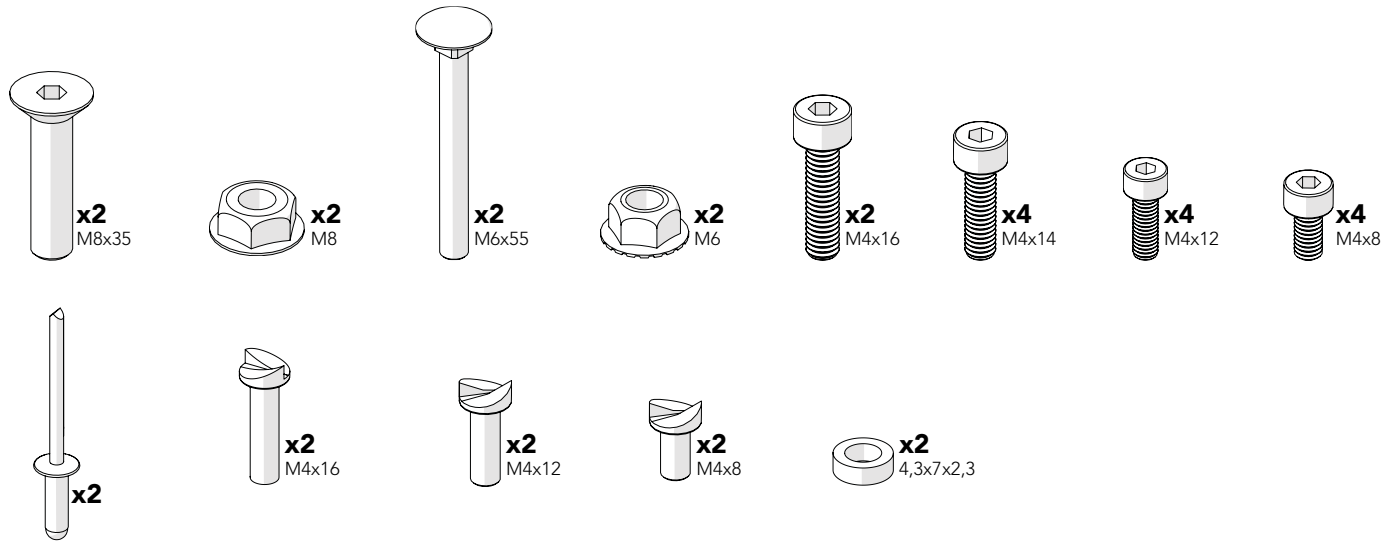

Safe Escape Lock Single

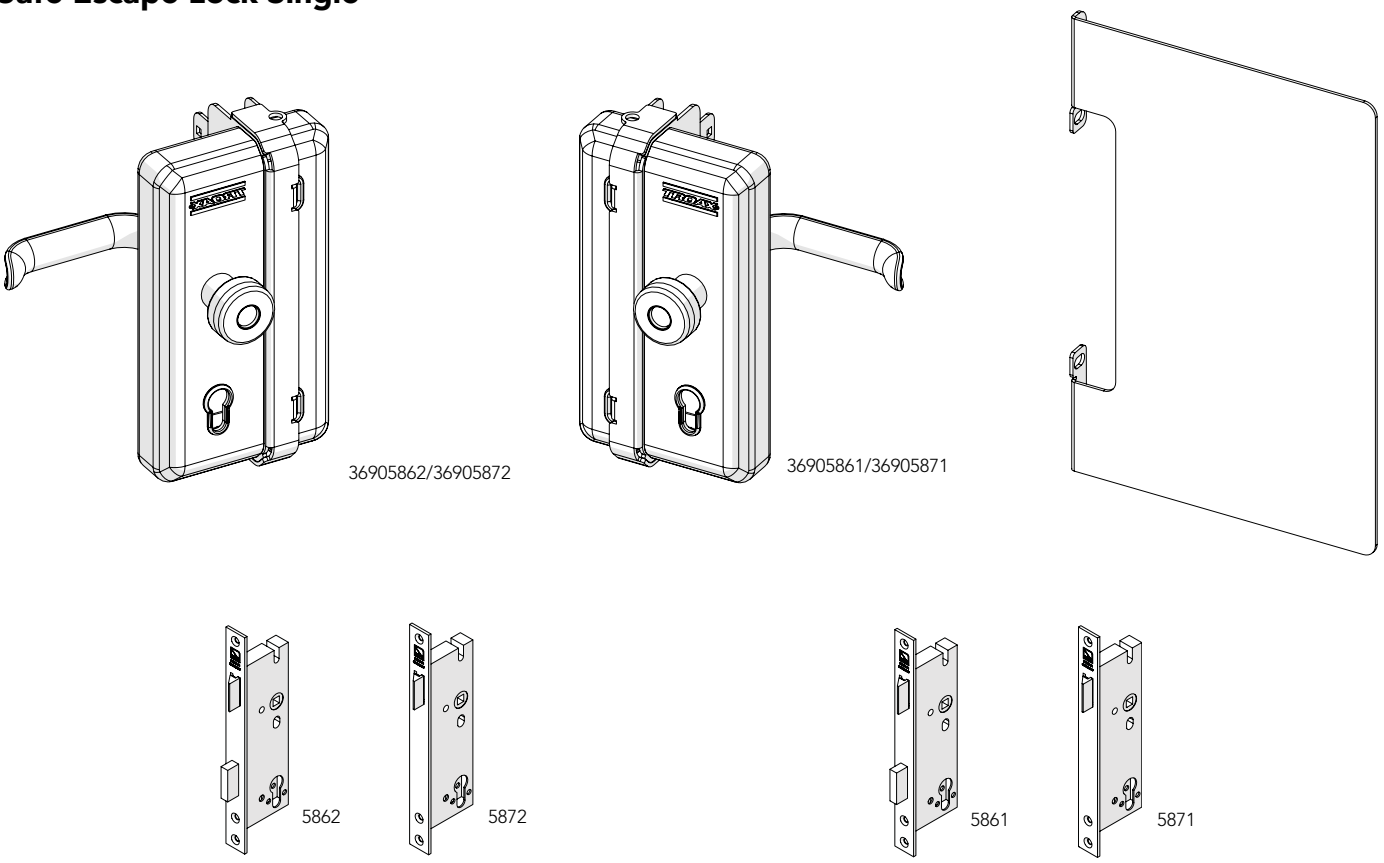

Art no: 88754764 ver. 003

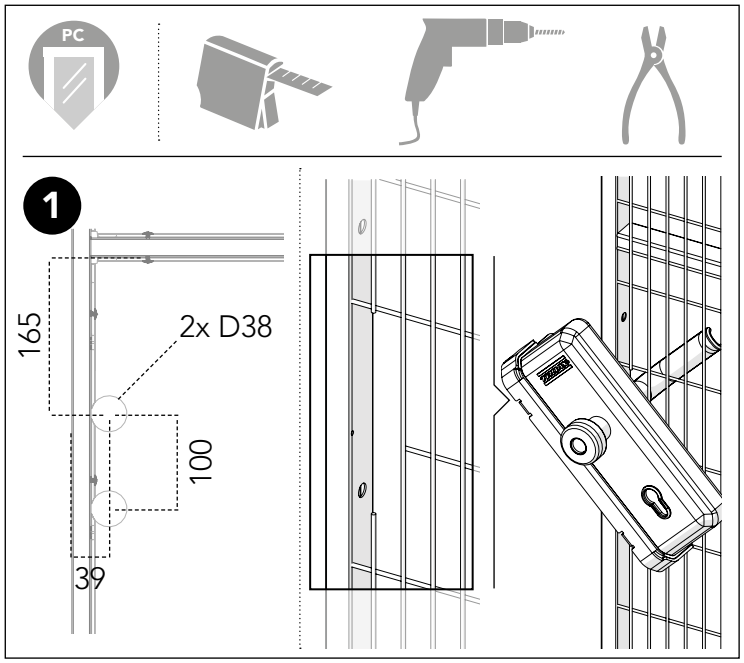

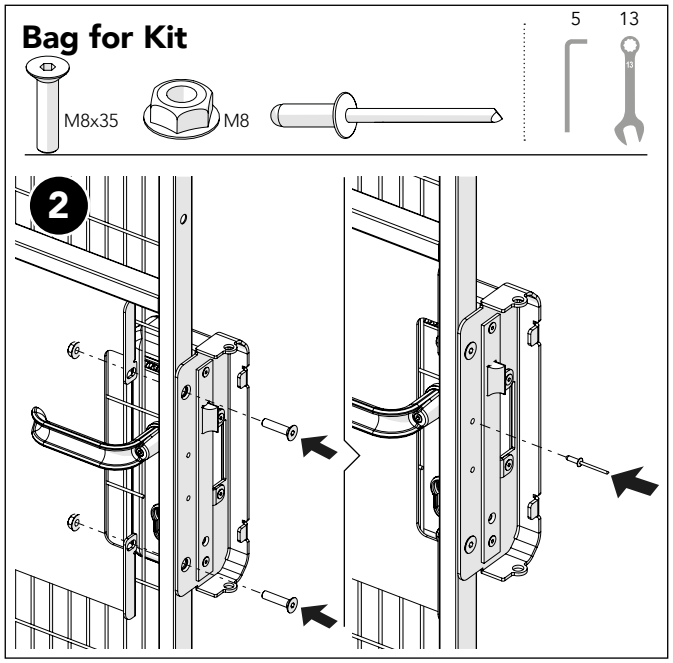

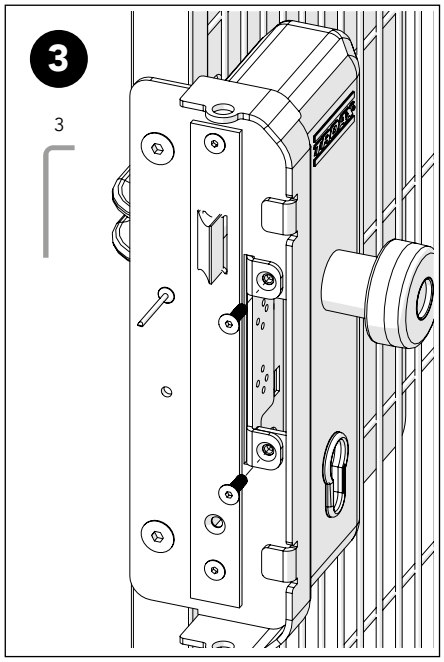

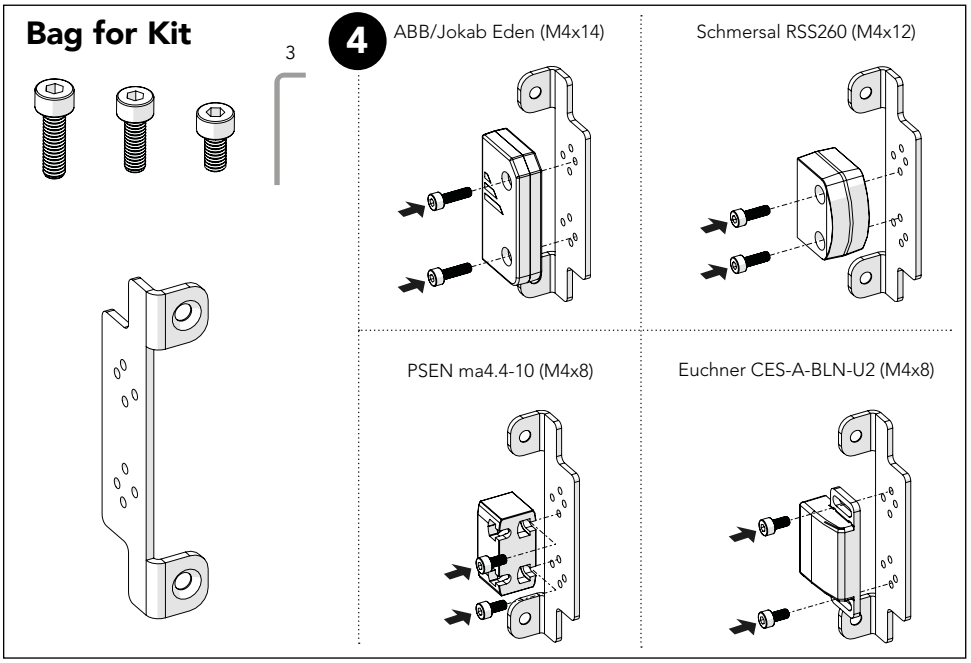

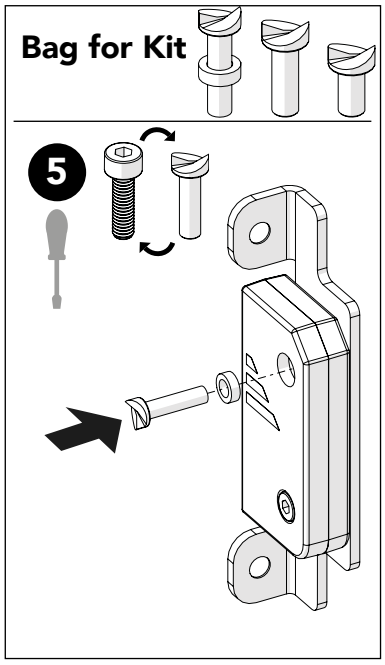

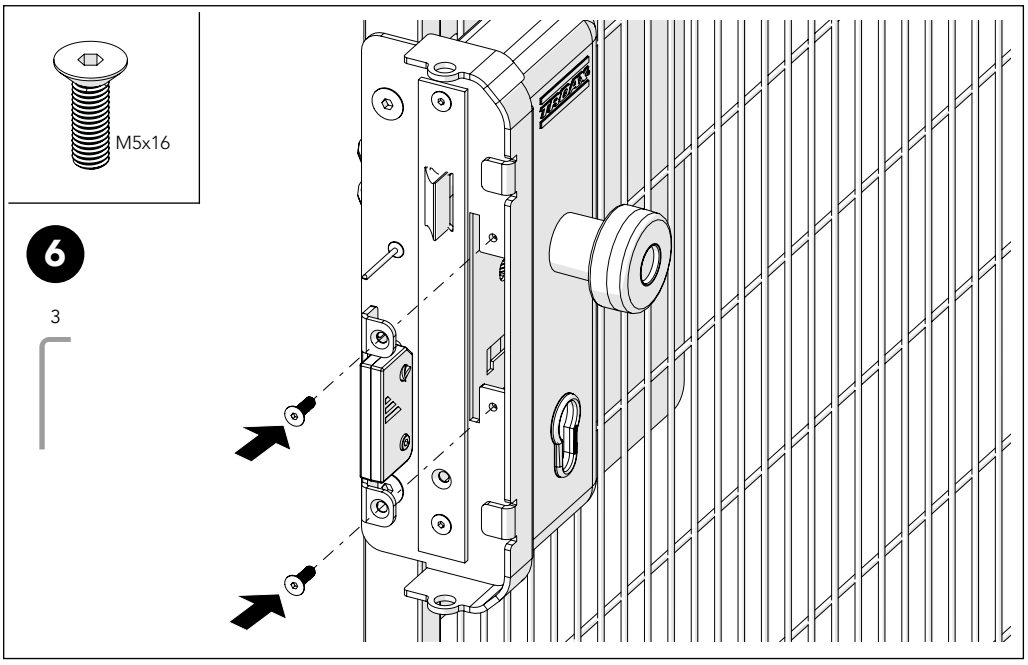

Art no: 887547/64 ver. 003

Bag for Kit

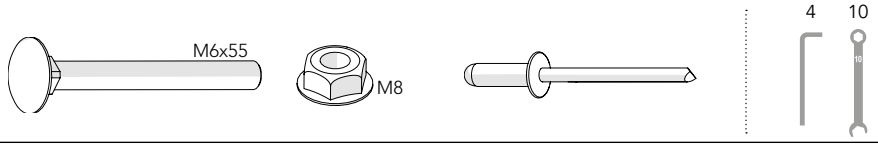

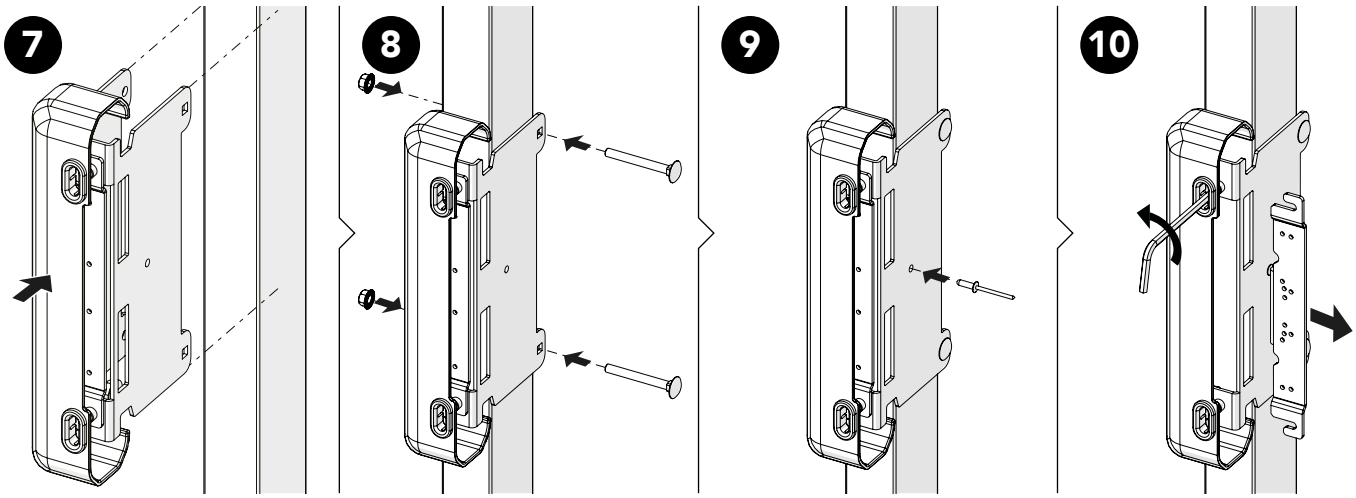

Bag for Kit

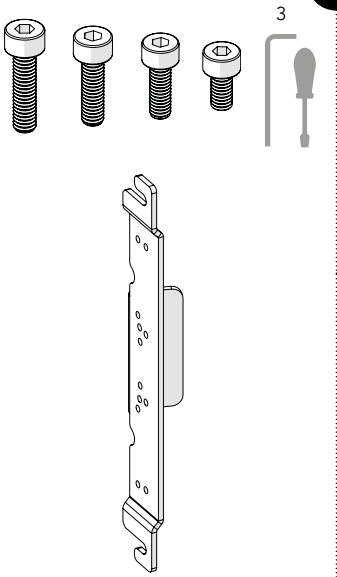

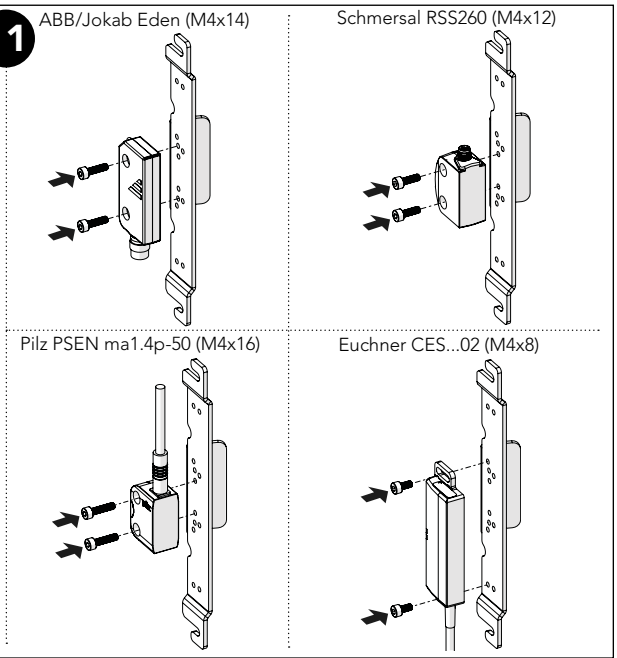

Bag for Kit

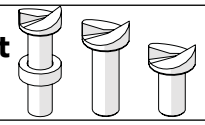

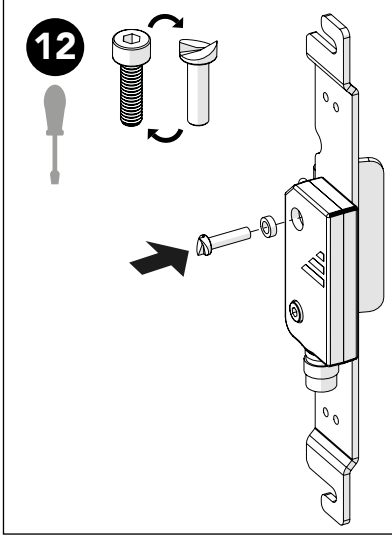

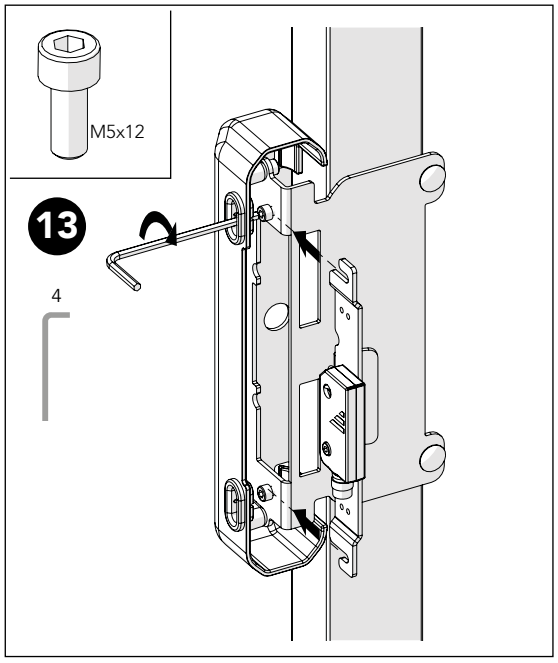

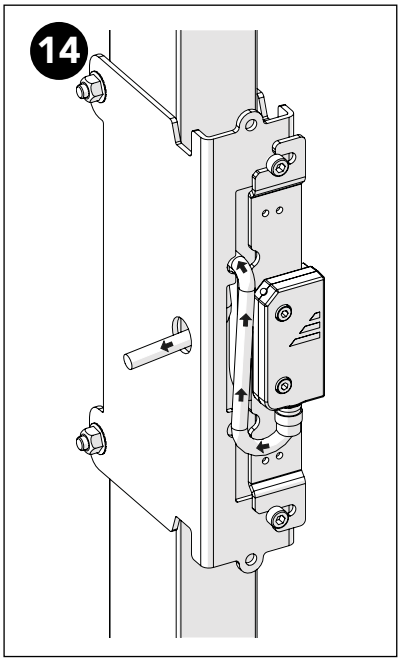

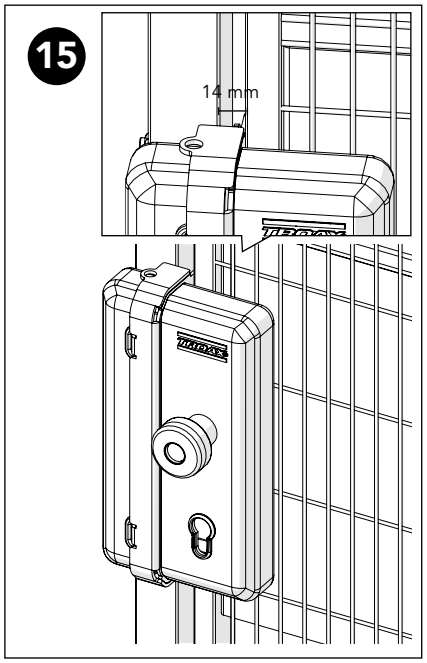

Art no: 88754764 ver. 003