TROAX

Warehouse Partitioning

Double sliding door EC Lock 22mm

Kit 36907630 , 36907680

Art no: 88754507 ver. 01 Print no: 202109-1903-EN

Follow me

www.troax.com

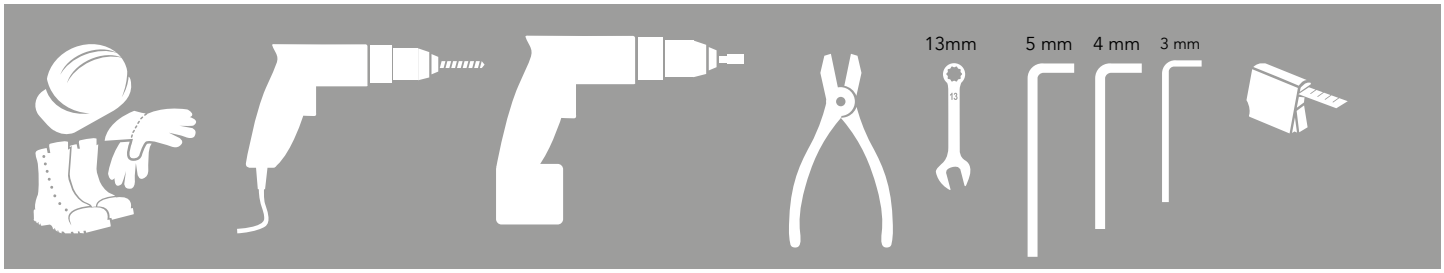

Kit Double sliding door WP EC Lock

Kit 7680 MHL UX EC Dbl. Slide acc 36907680

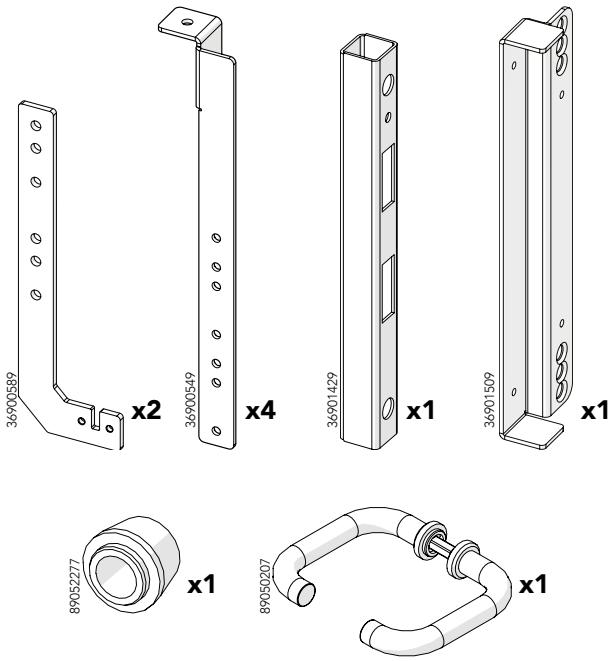

Bag for kit 7680 88697680

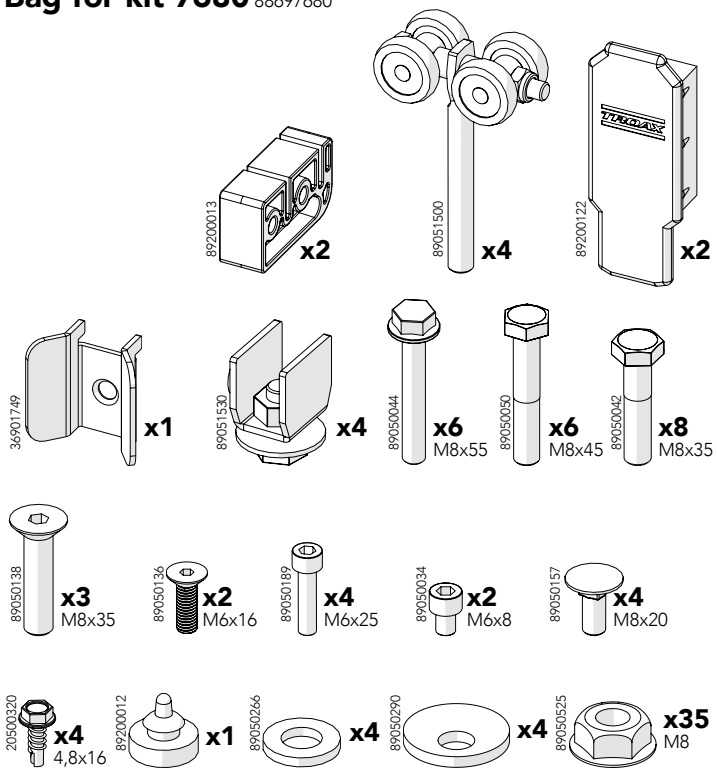

Art no: 88754507 ver. 01

Kit 7630 MHL UX EC Slide door 36907630

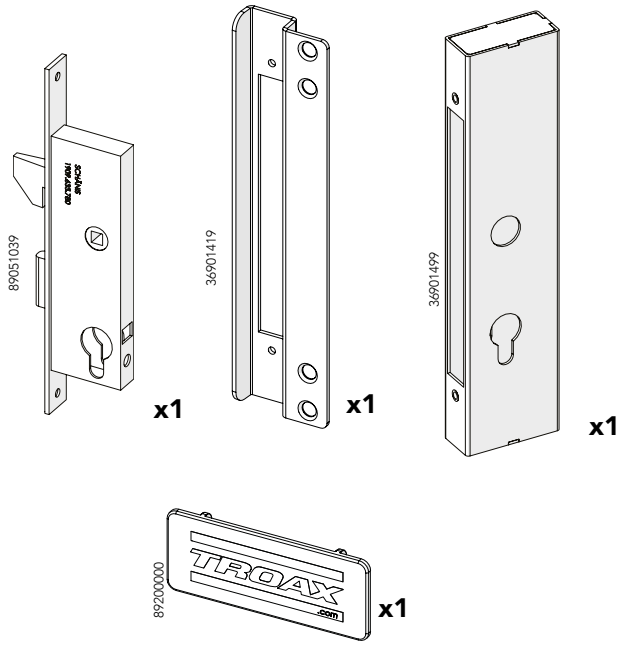

Bag for Kit 7630 88697610

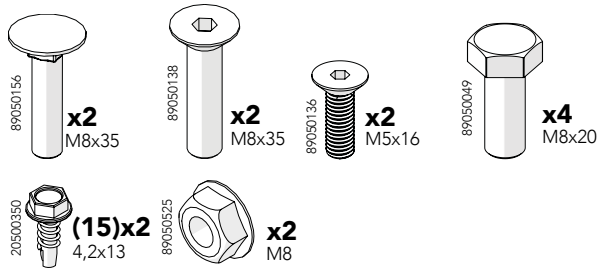

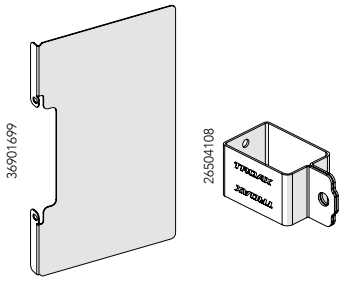

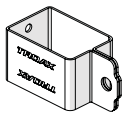

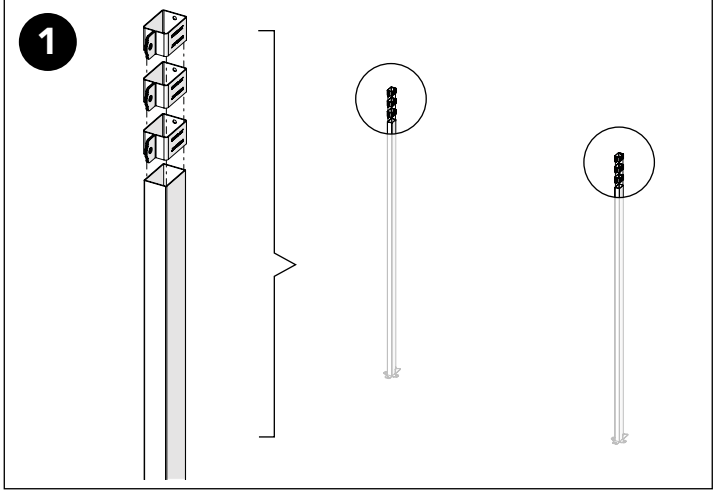

Bag for kit 7680

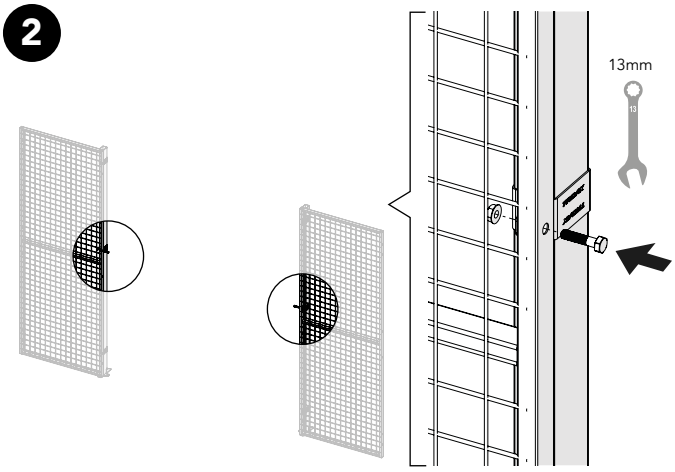

Kit 7680 + Bag for kit 7680

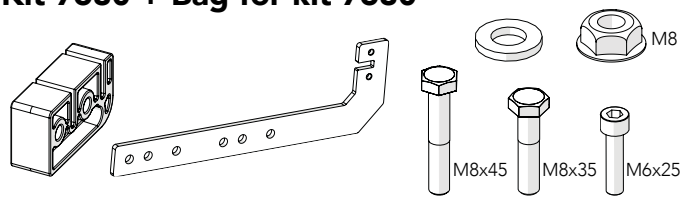

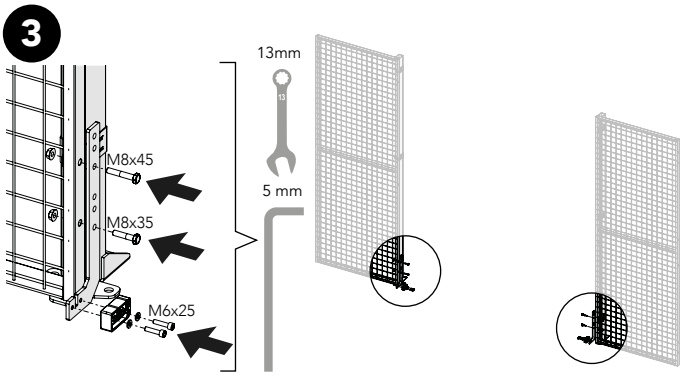

Kit 7680 + Bag for kit 7680

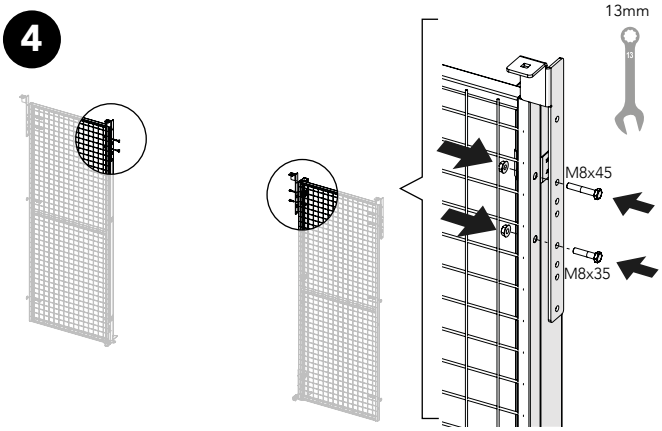

Kit 7680 + Bag for kit 7680

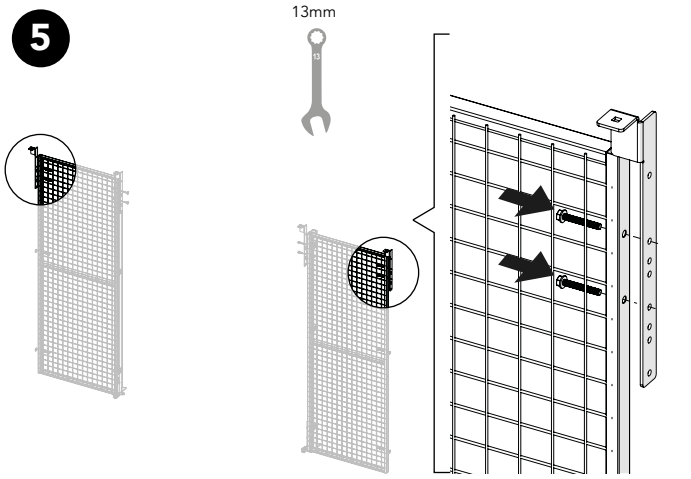

Bag for kit 7680

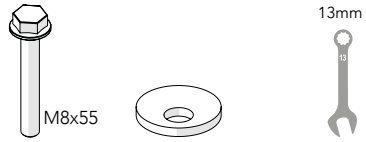

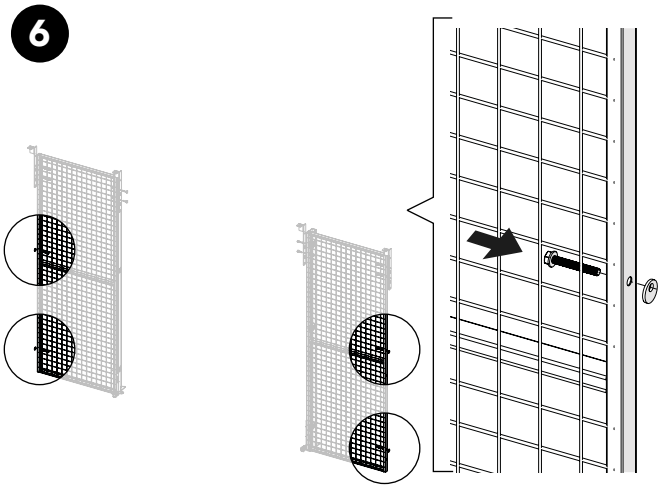

Art no: 88754507 ver. 01

Bag for kit 7680

7

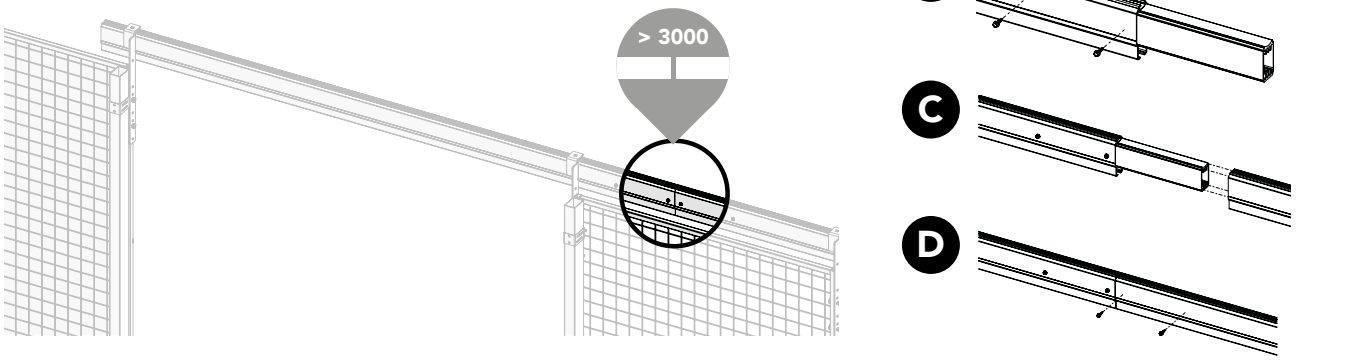

Bag for kit 7680

8

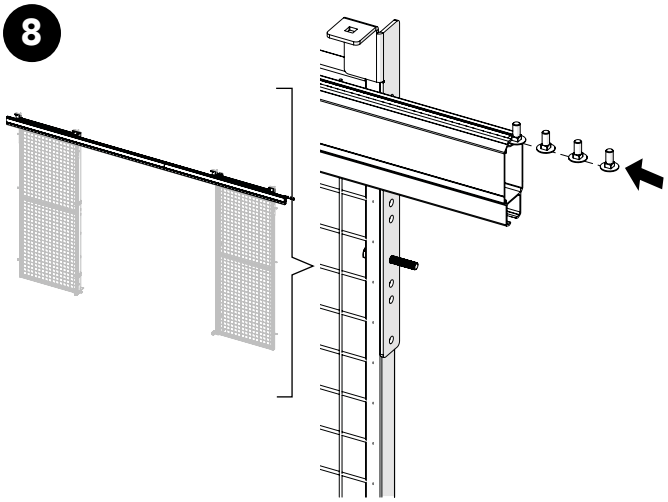

9

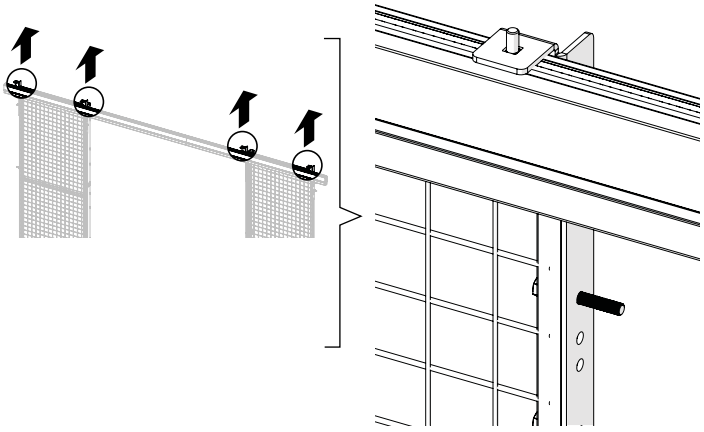

Art no: 8875405 ver. 01

Bag for kit 7680

10

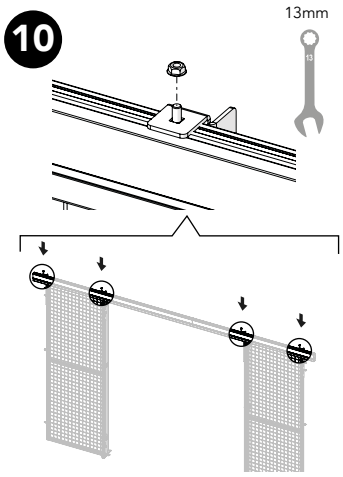

Bag for kit 7630

11

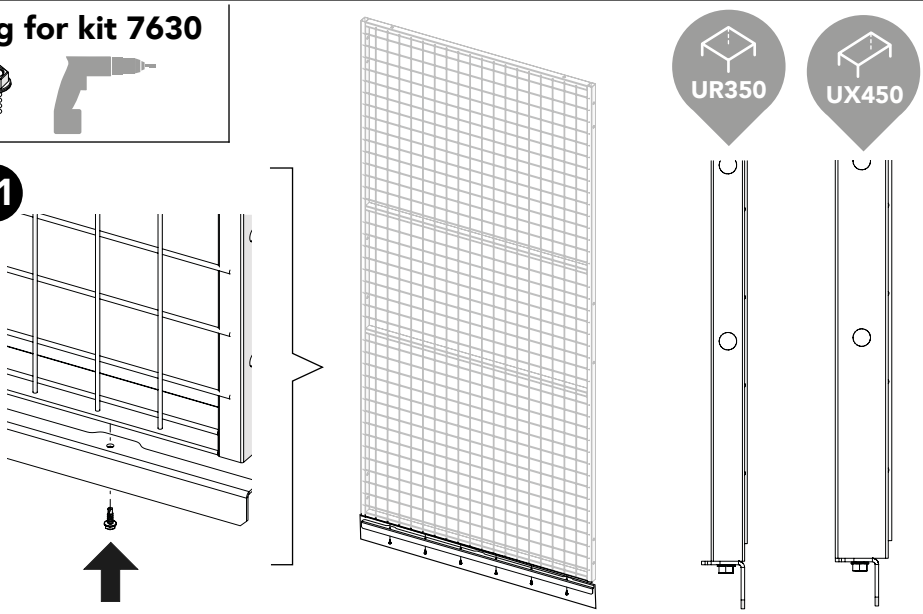

Bag for kit 7680

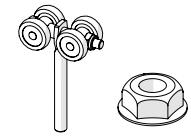

12

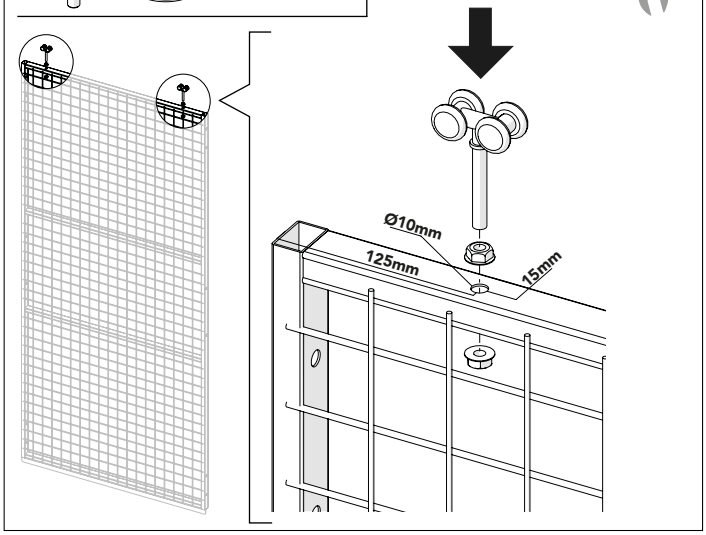

Bag for kit 7680

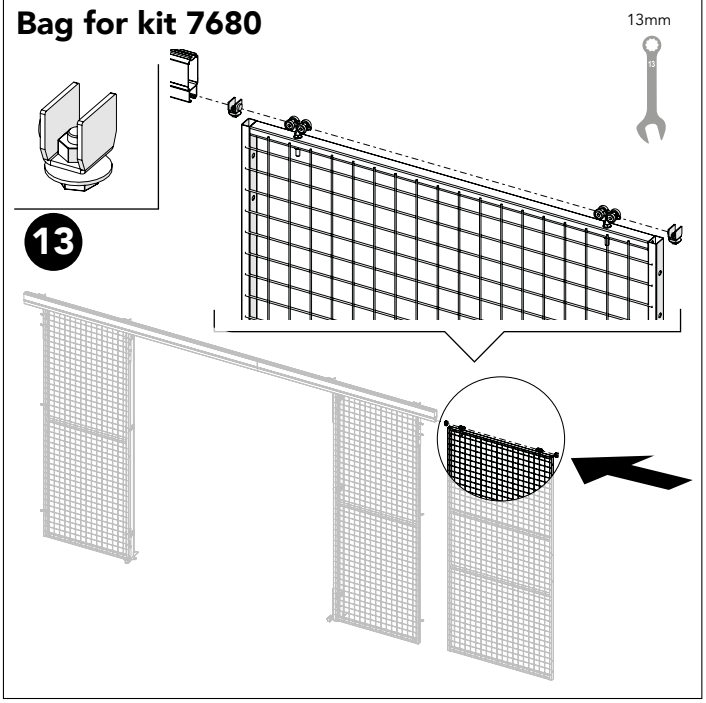

13

Bag for kit 7680

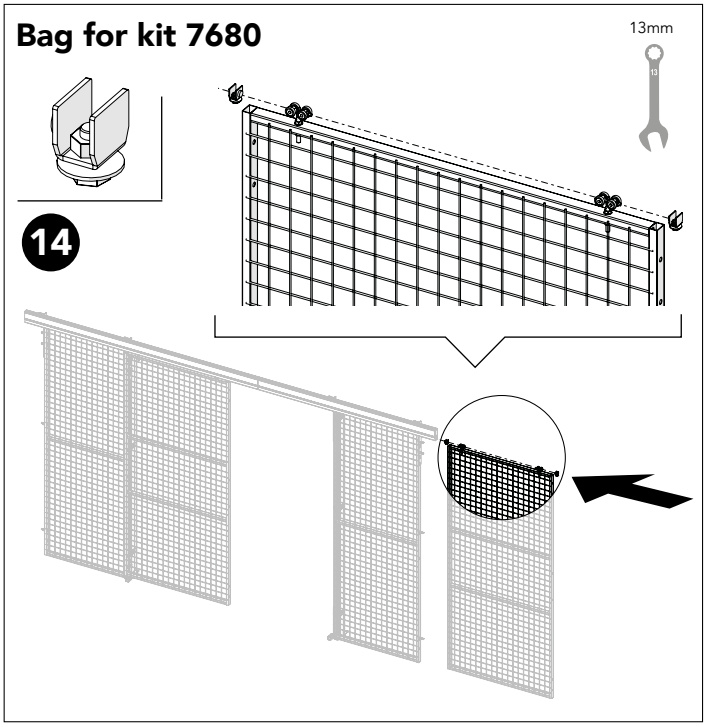

14

Bag for kit 7680

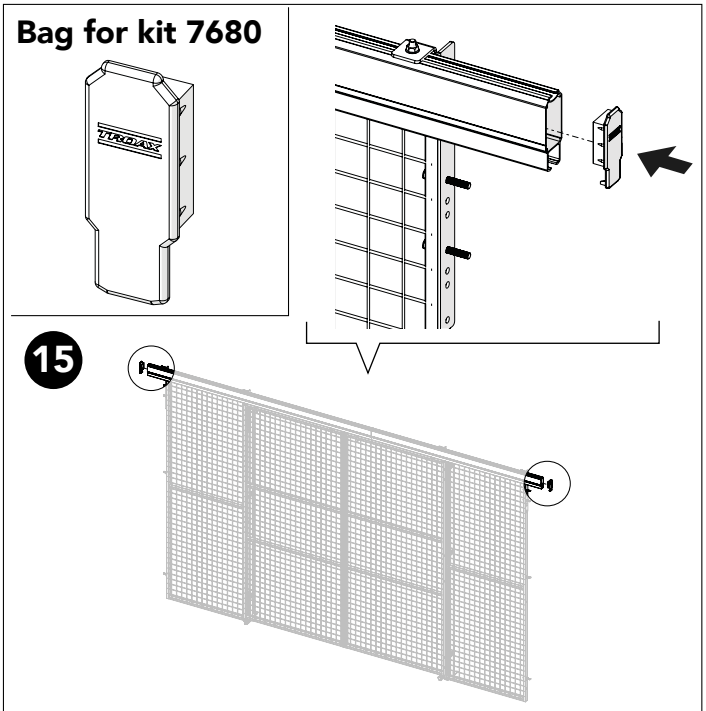

15

Kit 7680 + Bag for kit 7680

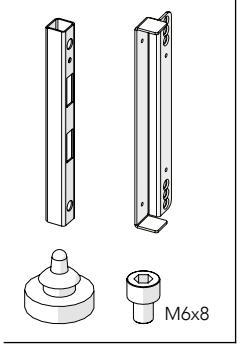

16

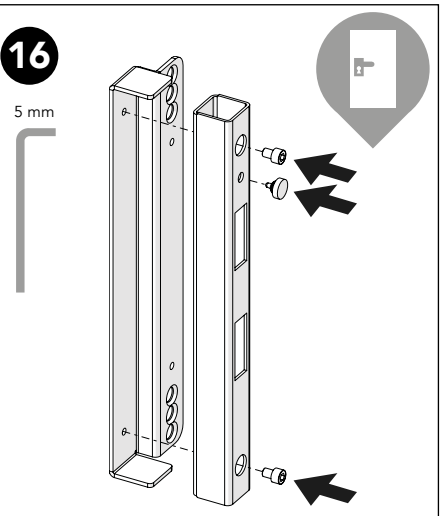

Kit 7680 + Bag for kit 7680

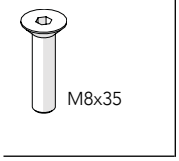

17

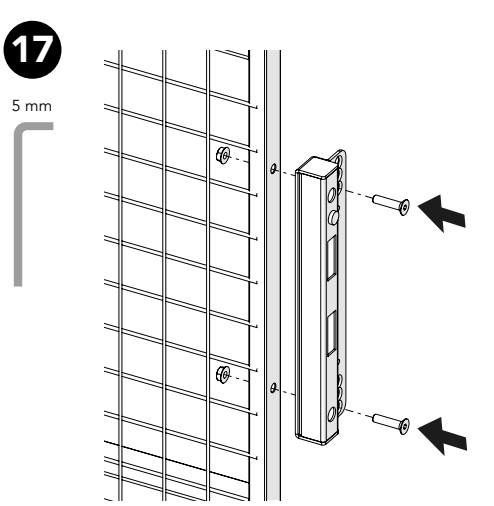

Art no: 88754507 ver. 01

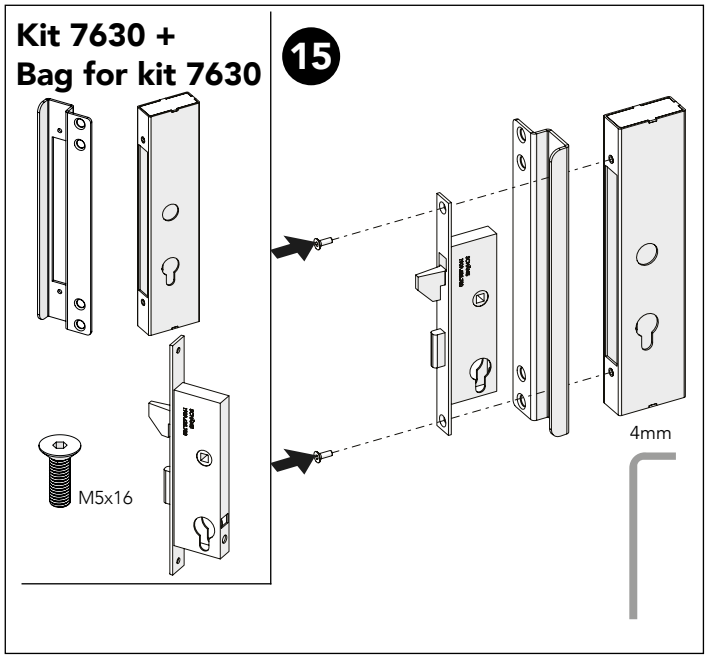

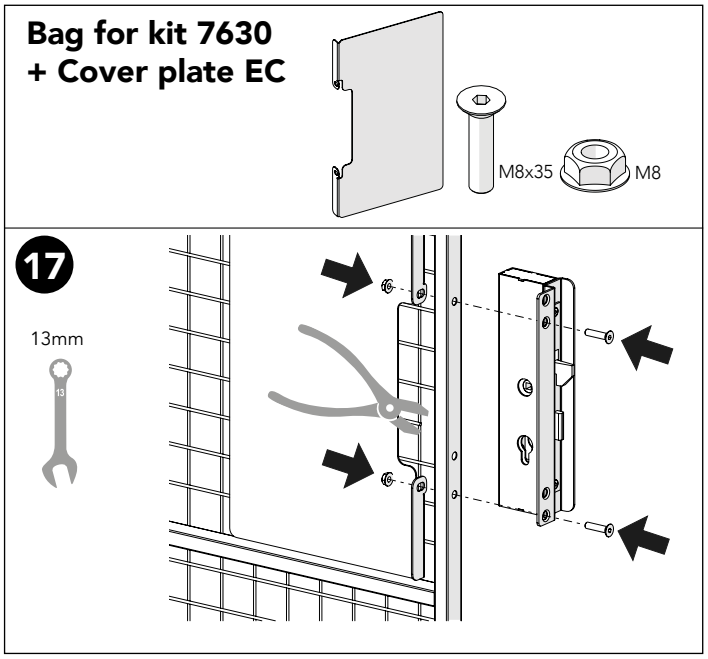

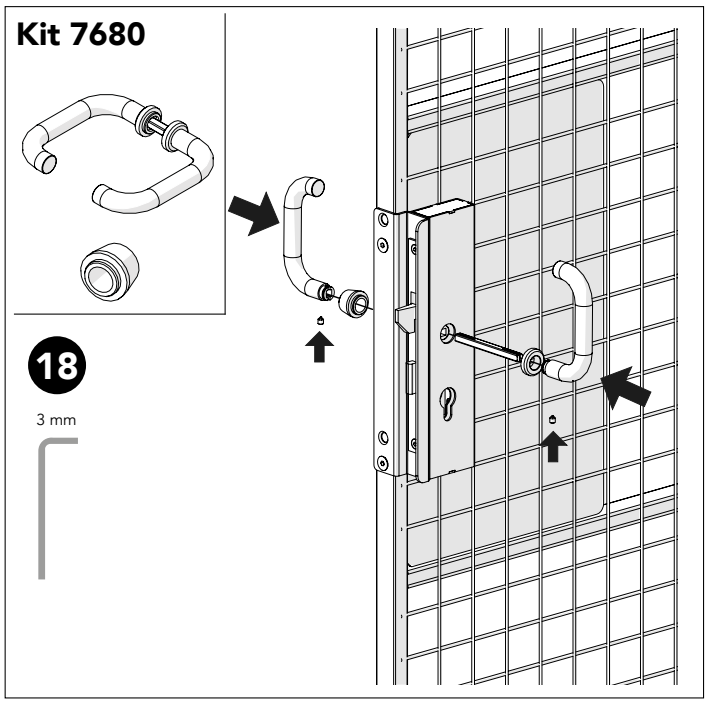

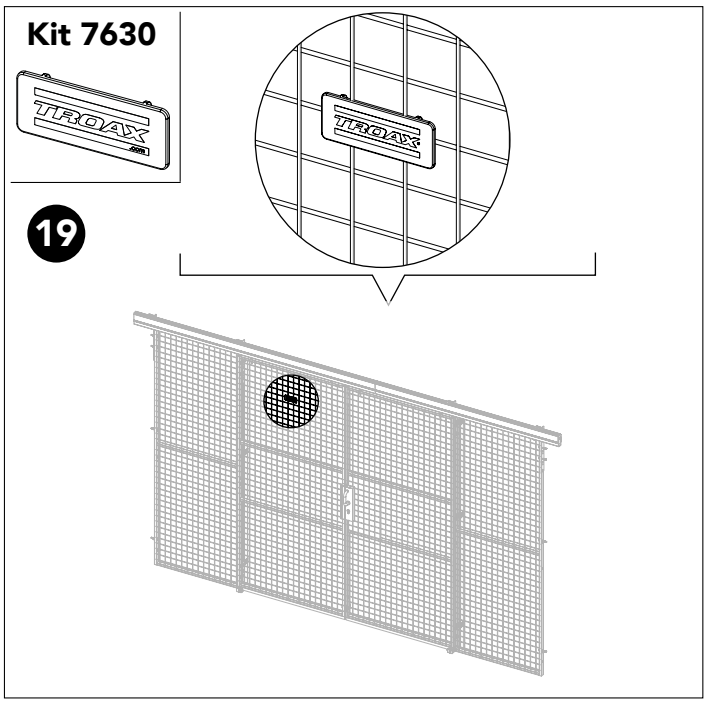

Art no: 88754507 ver. 01