d-flexx

d-flexx

Juliet

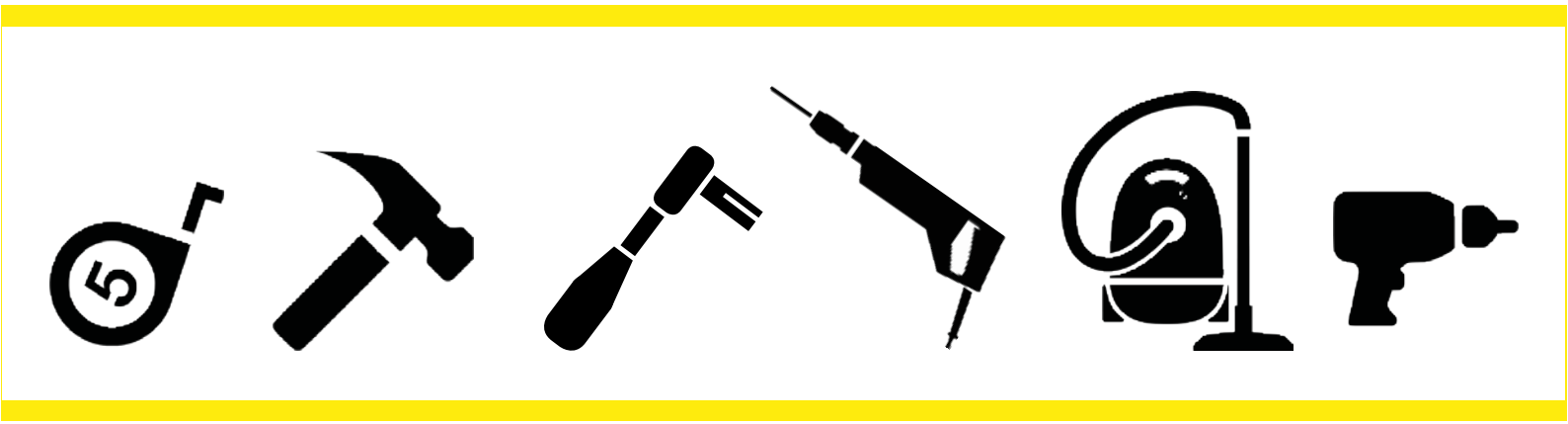

"Delta"

DFJU-TM
DFJU-TE
DFJU-TW90L
DFJU-TW90R

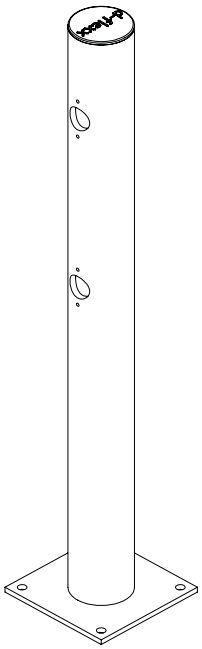

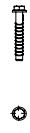

747.37-7

DFJU-T800
DFJU-T1000
DFJU-T1200

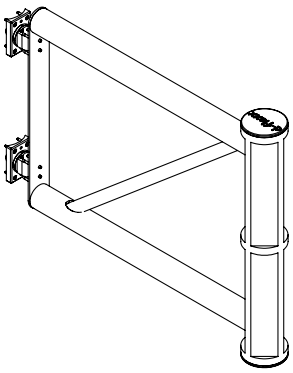

DFJU-T1500
DFJU-T1750
DFJU-T2000

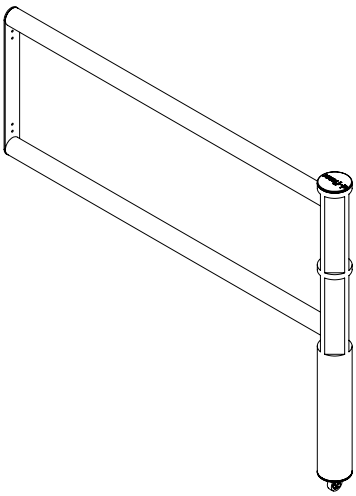

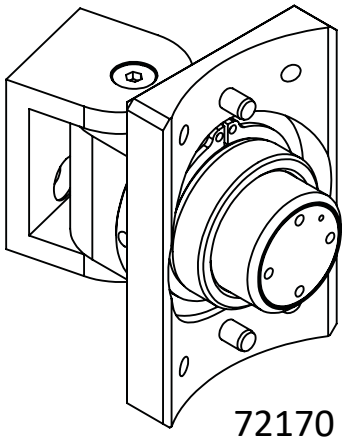

72170

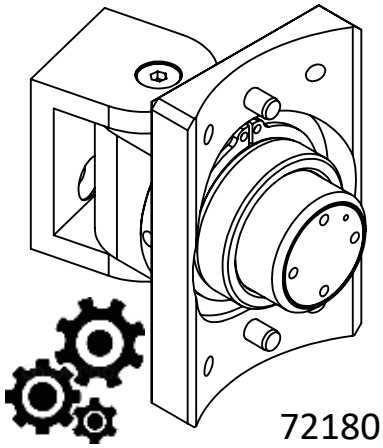

72180

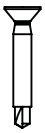

72191

72192

72175

72170

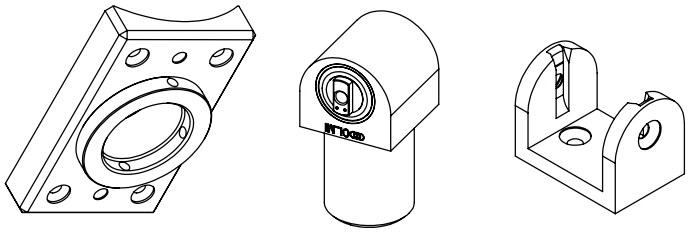

72180

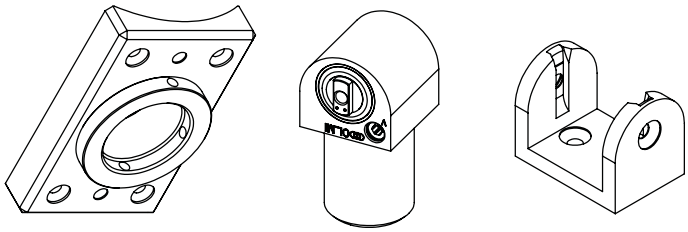

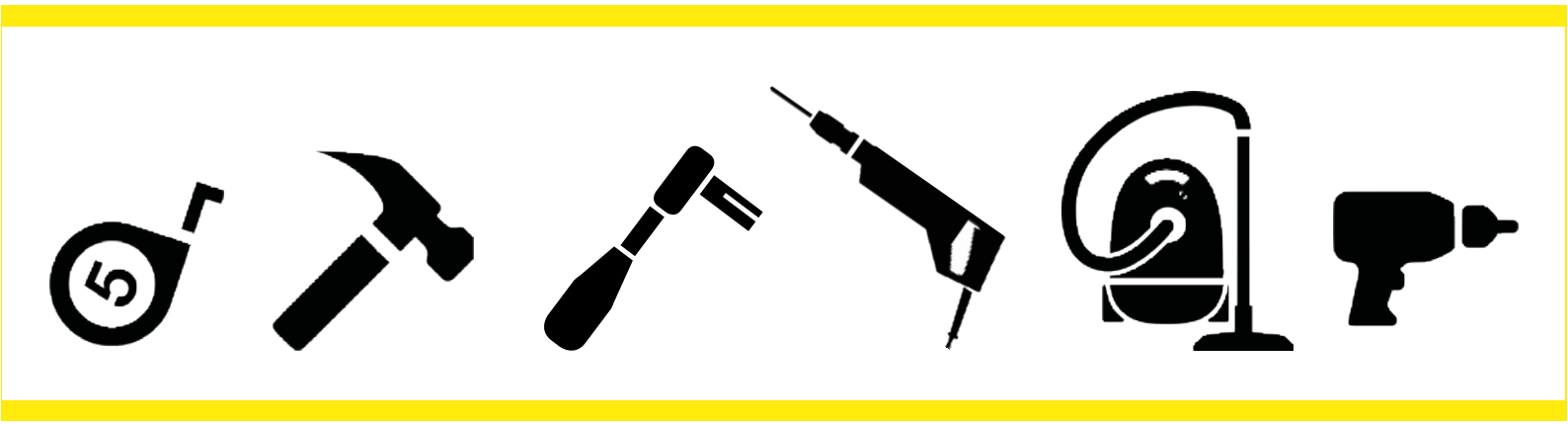

"Echo"

DFJU+TE
DFJU+TM
DFJU+TT
DFJU+TW90L
DFJU+TW90R

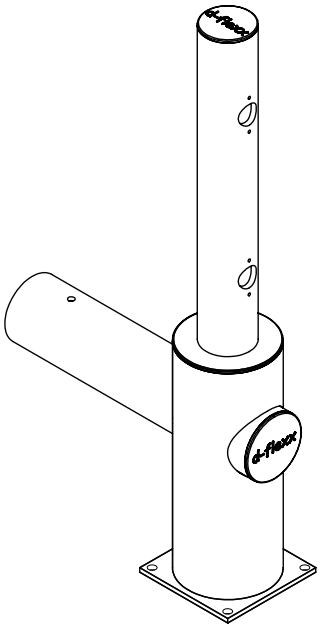

747.27-1

DFJU-T800
DFJU-T1000
DFJU-T1200

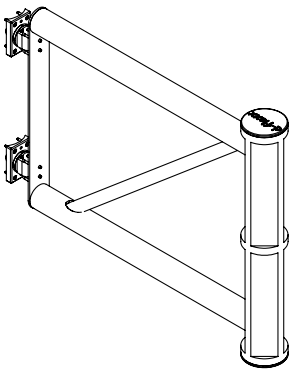

DFJU-T1500
DFJU-T1750
DFJU-T2000

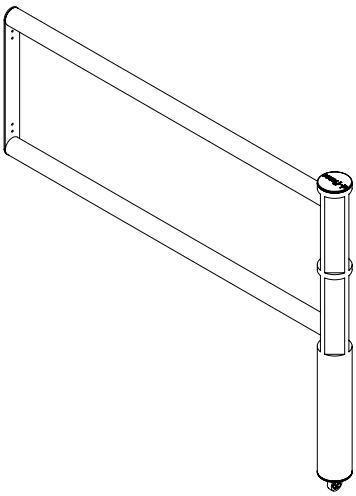

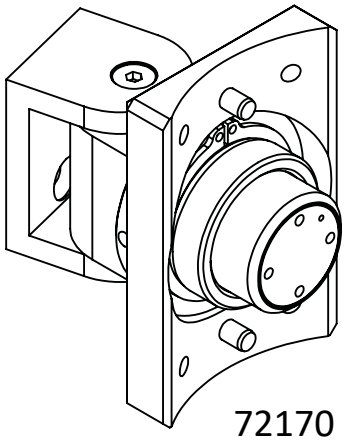

72170

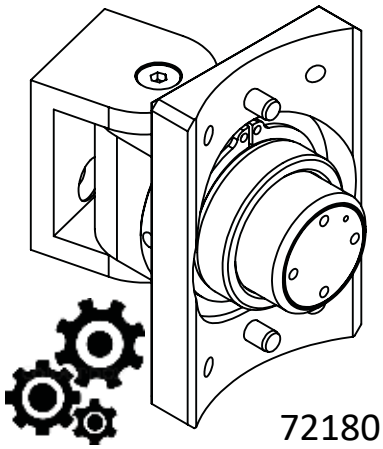

72180

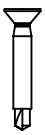

72191

72192

72175

72170

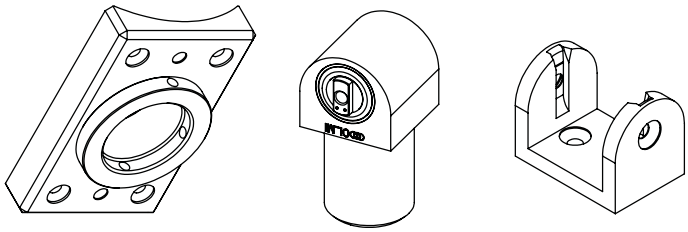

72180

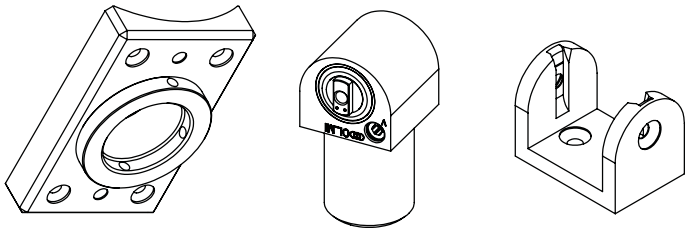

"Delta"

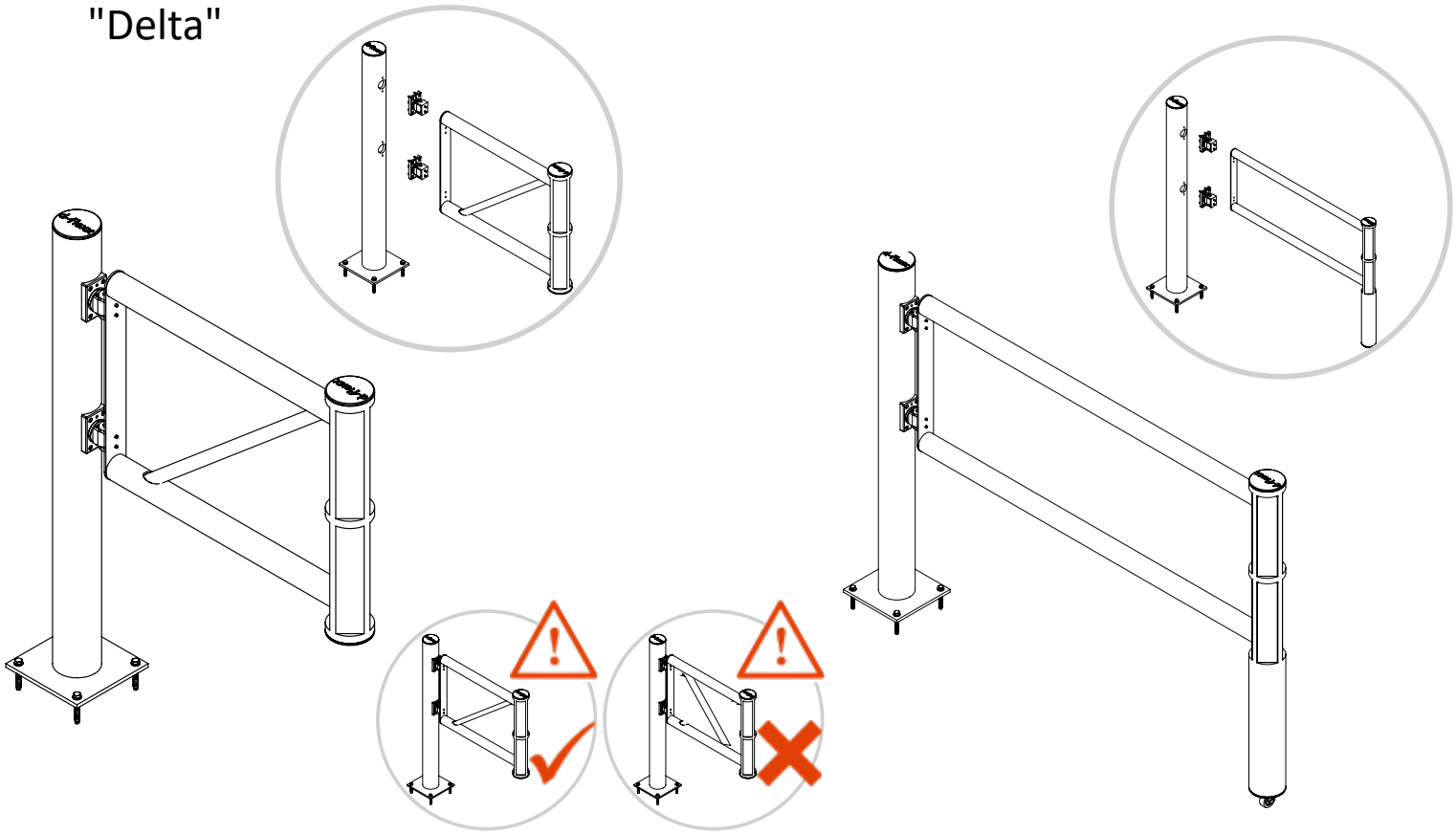

"Echo"

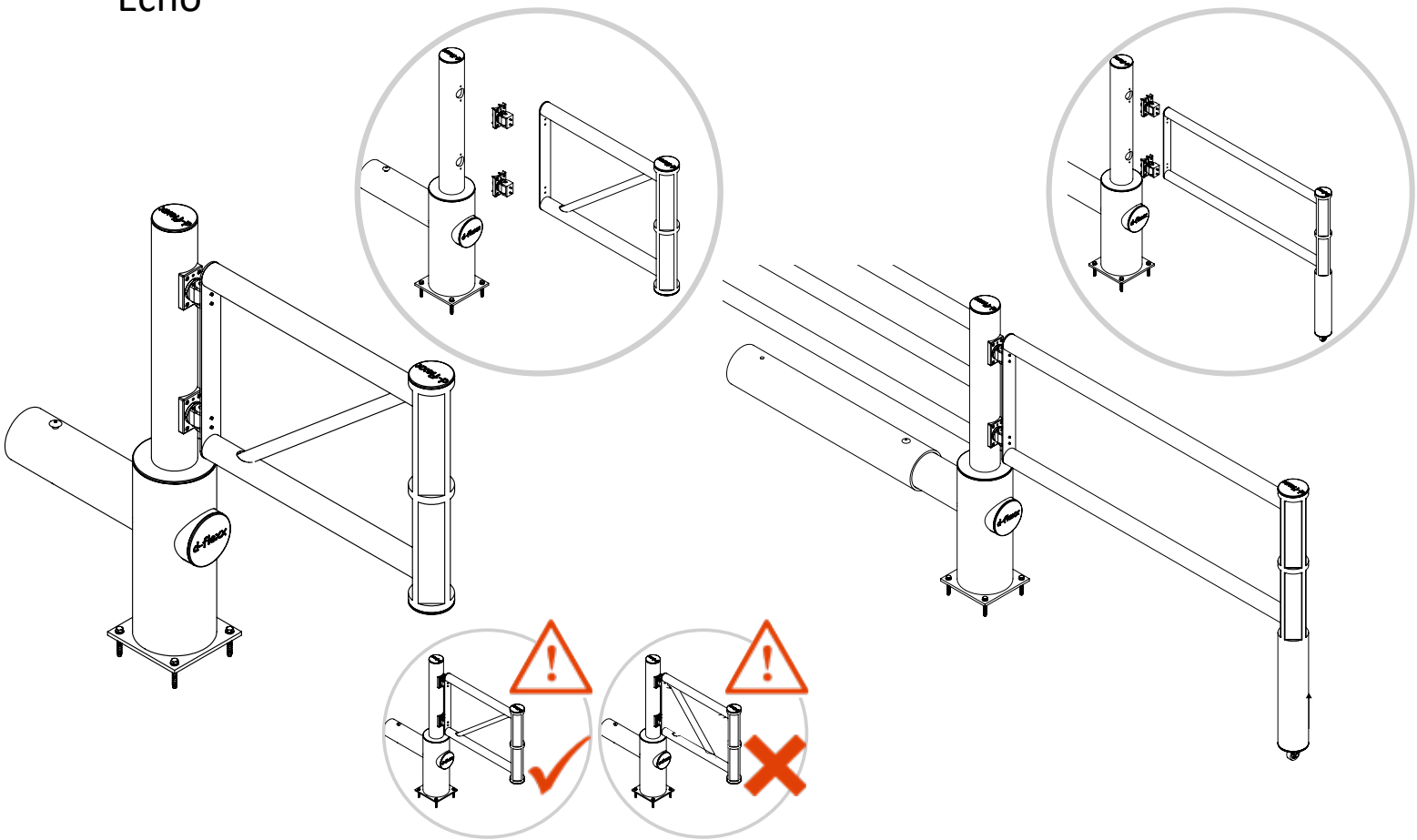

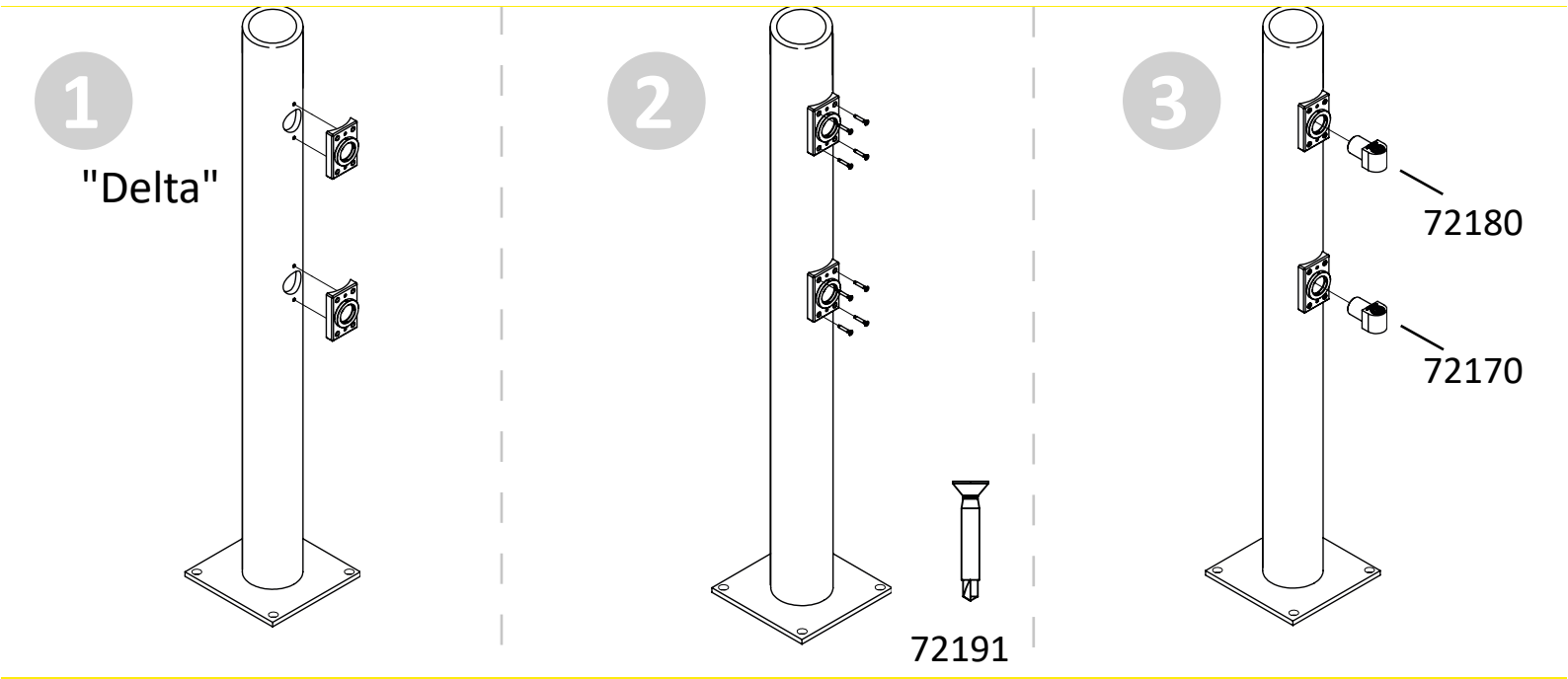
1
"Delta"
2
72191
3
72180
72170

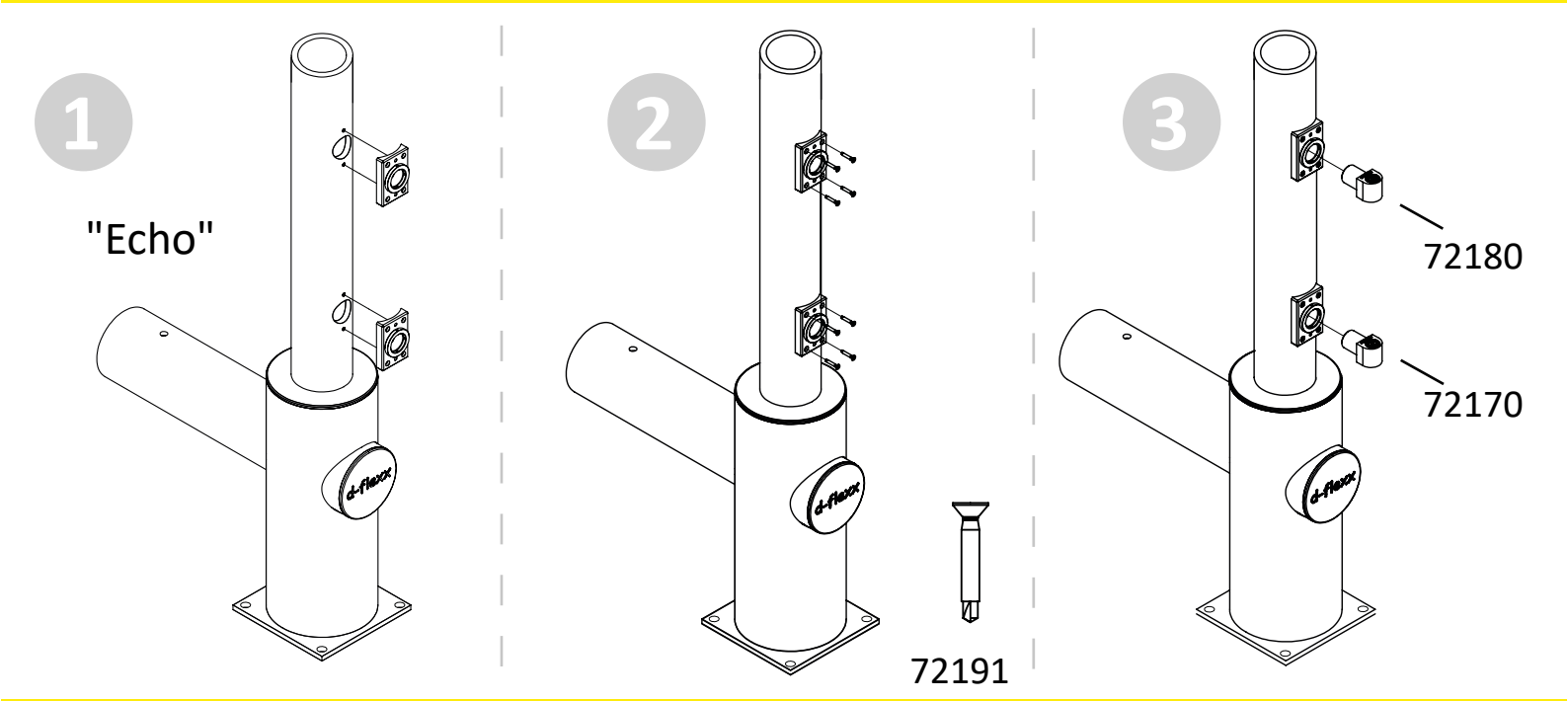
1
"Echo"
2
72191
3
72180
72170

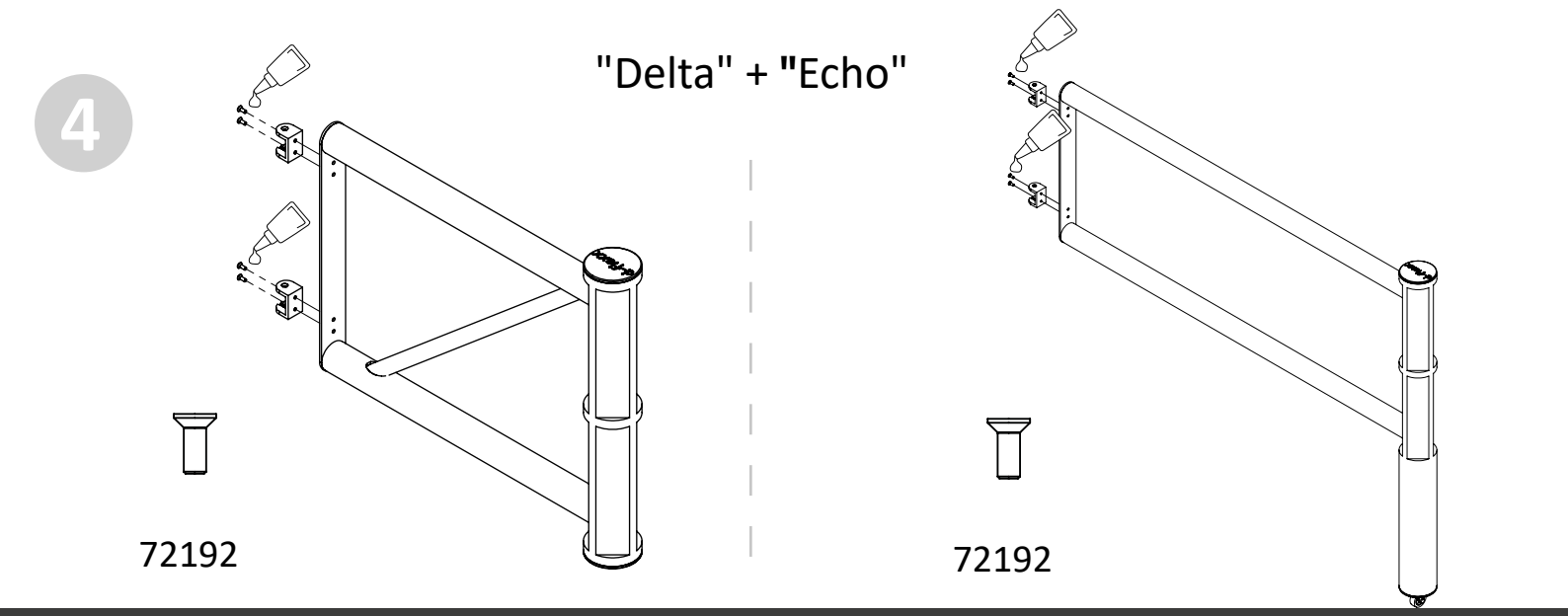
4
"Delta" + "Echo"
72192
72192

5

"Delta" + "Echo"

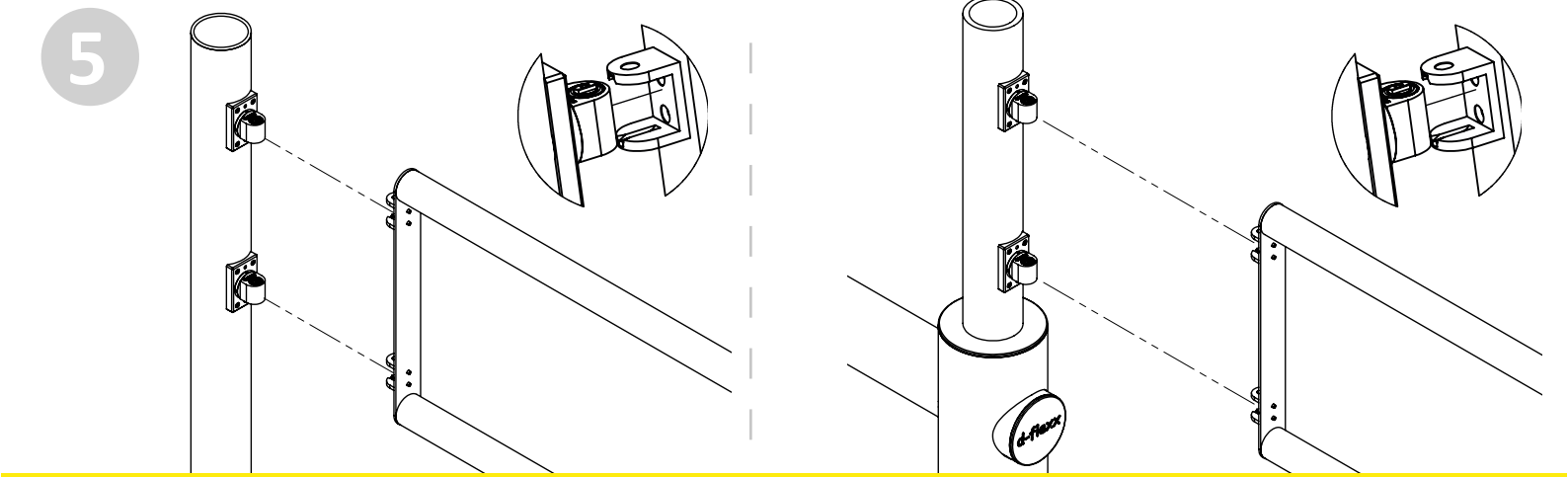

6

"Delta" + "Echo"

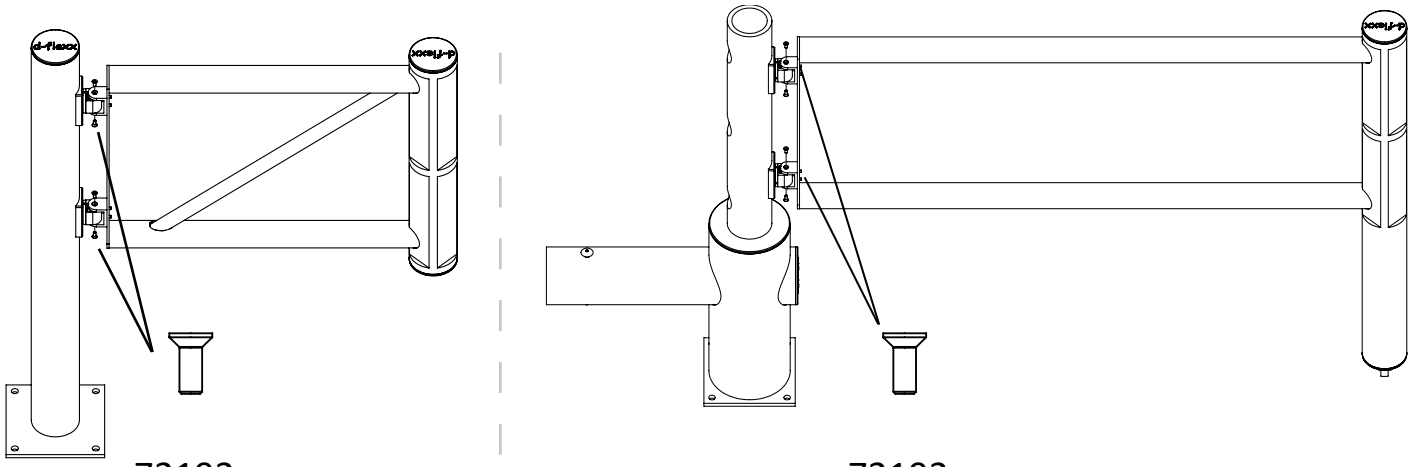

72192

72192

7

"Delta" + "Echo"

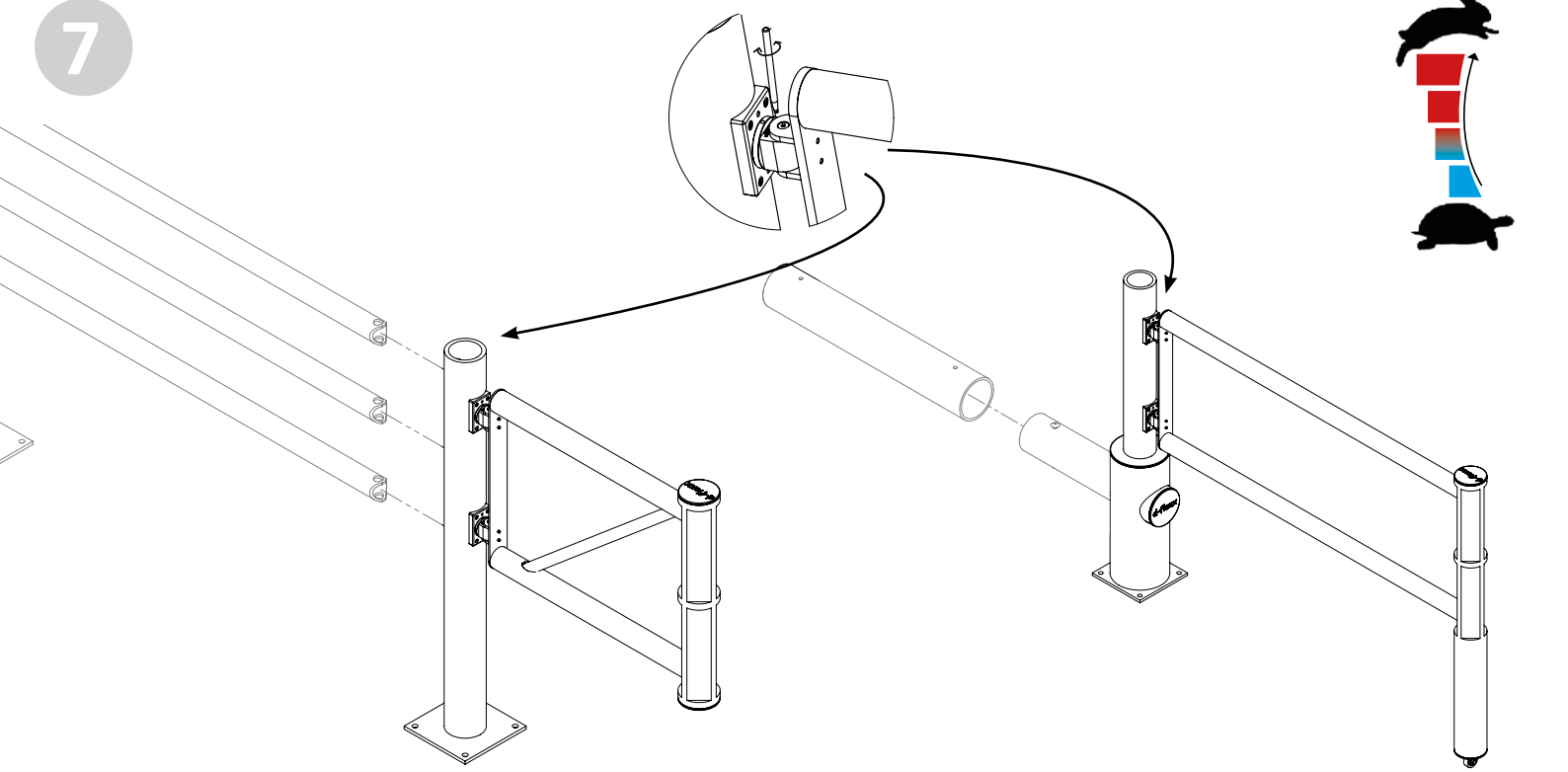

8

"Echo"

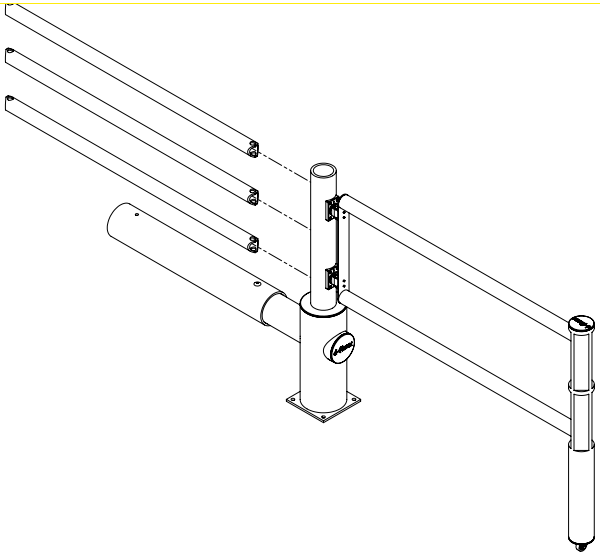

9

"Delta" + "Echo"

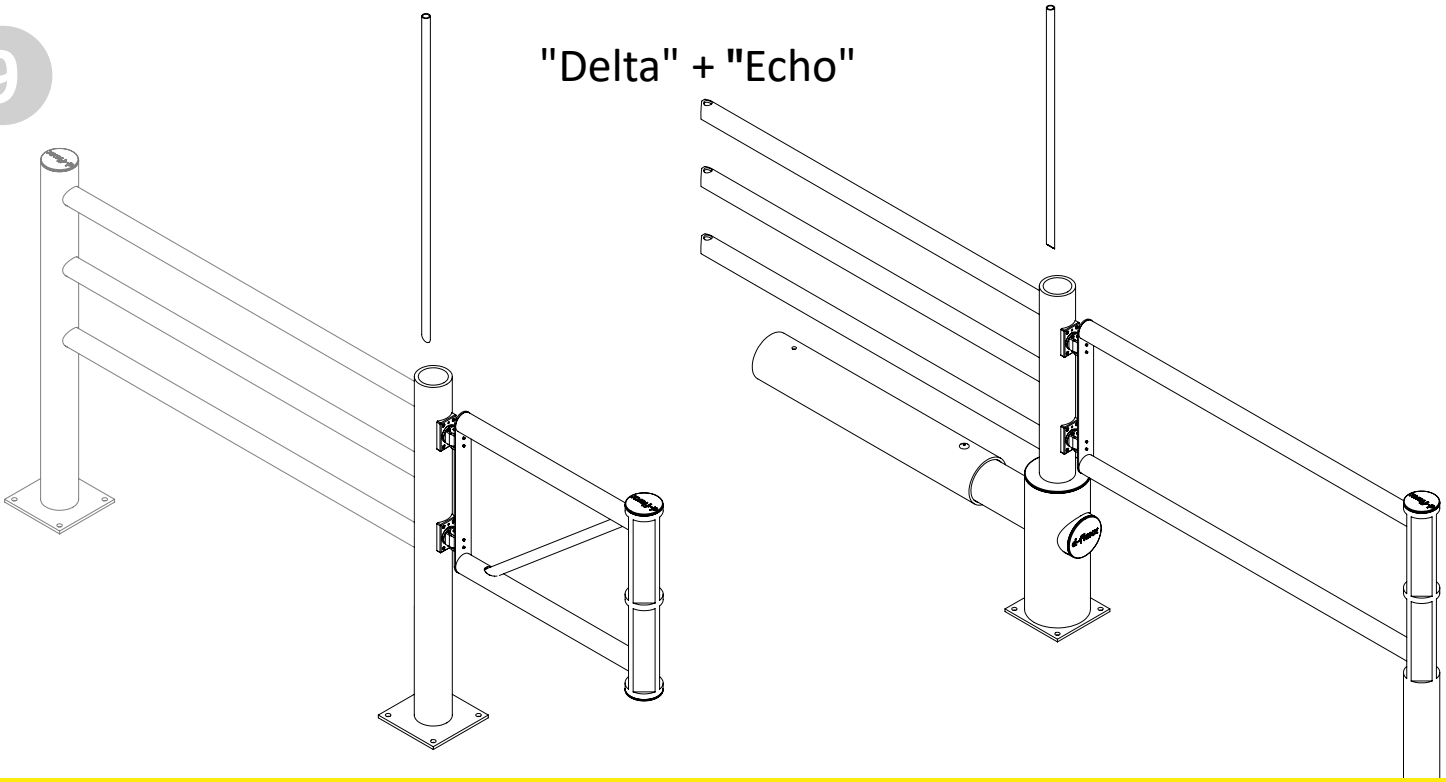

10

"Delta" + "Echo"

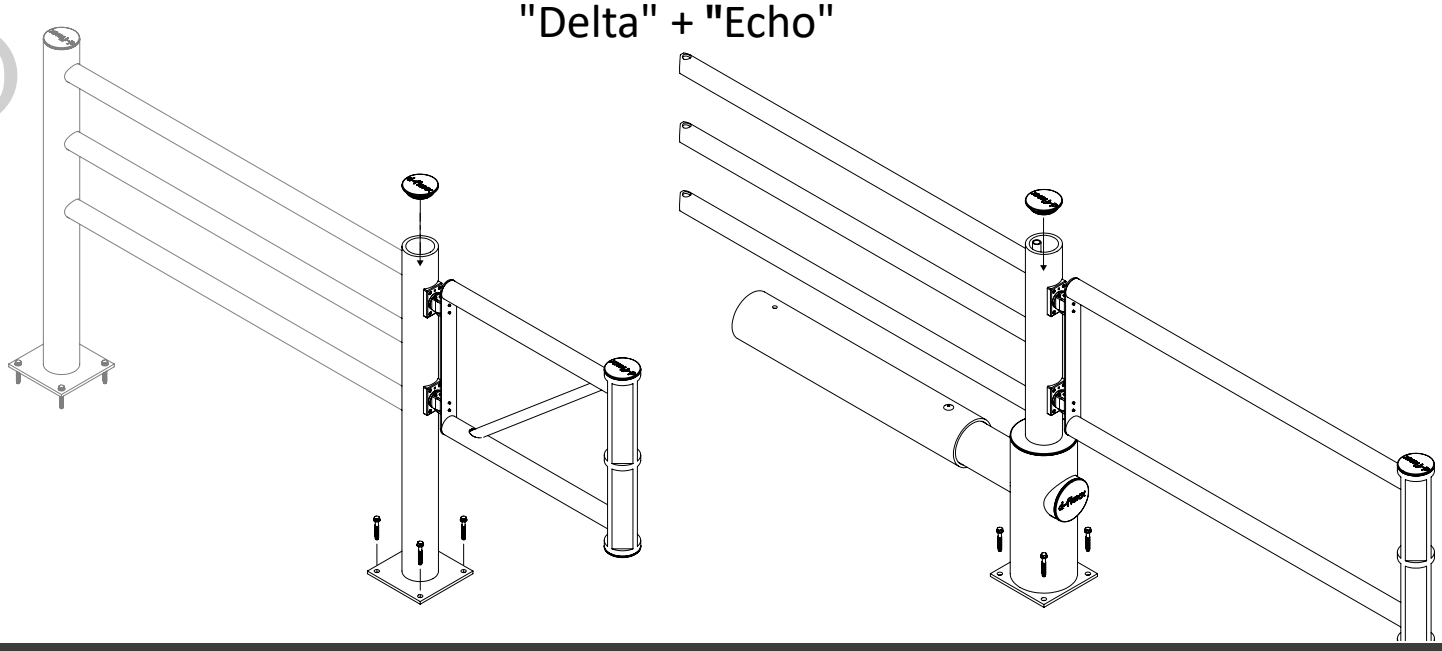

11

"Delta" + "Echo"

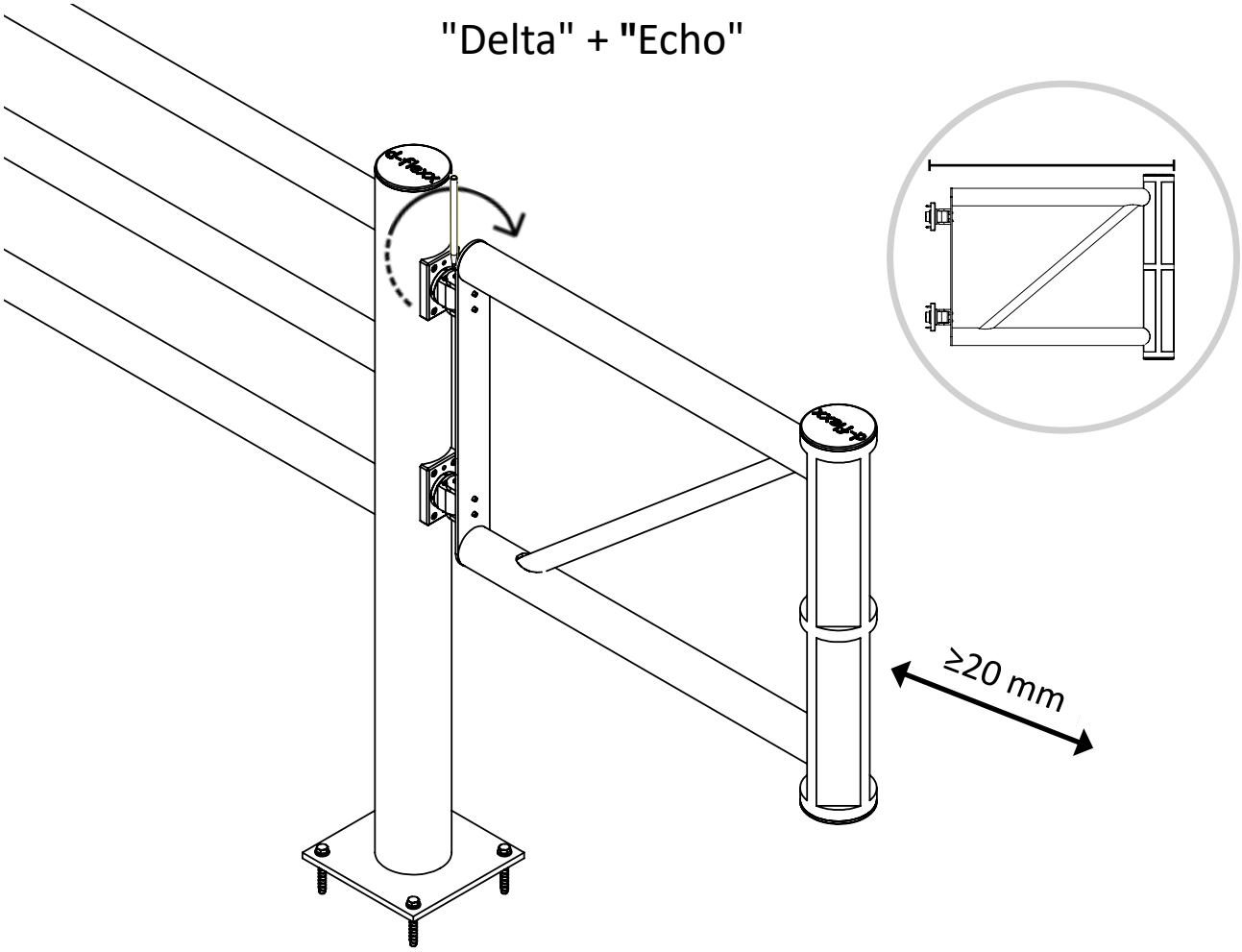

12

"Delta" + "Echo"

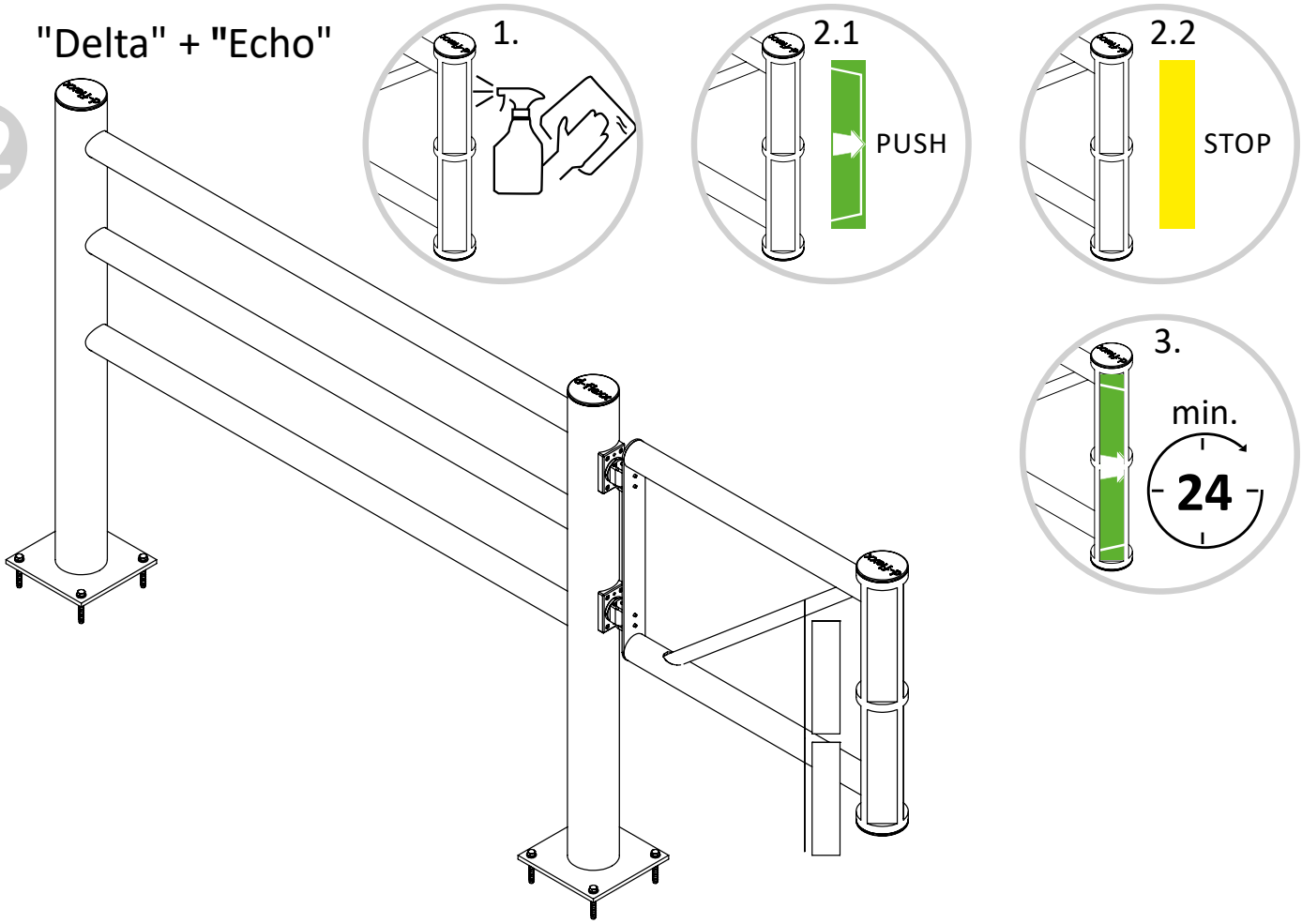

10

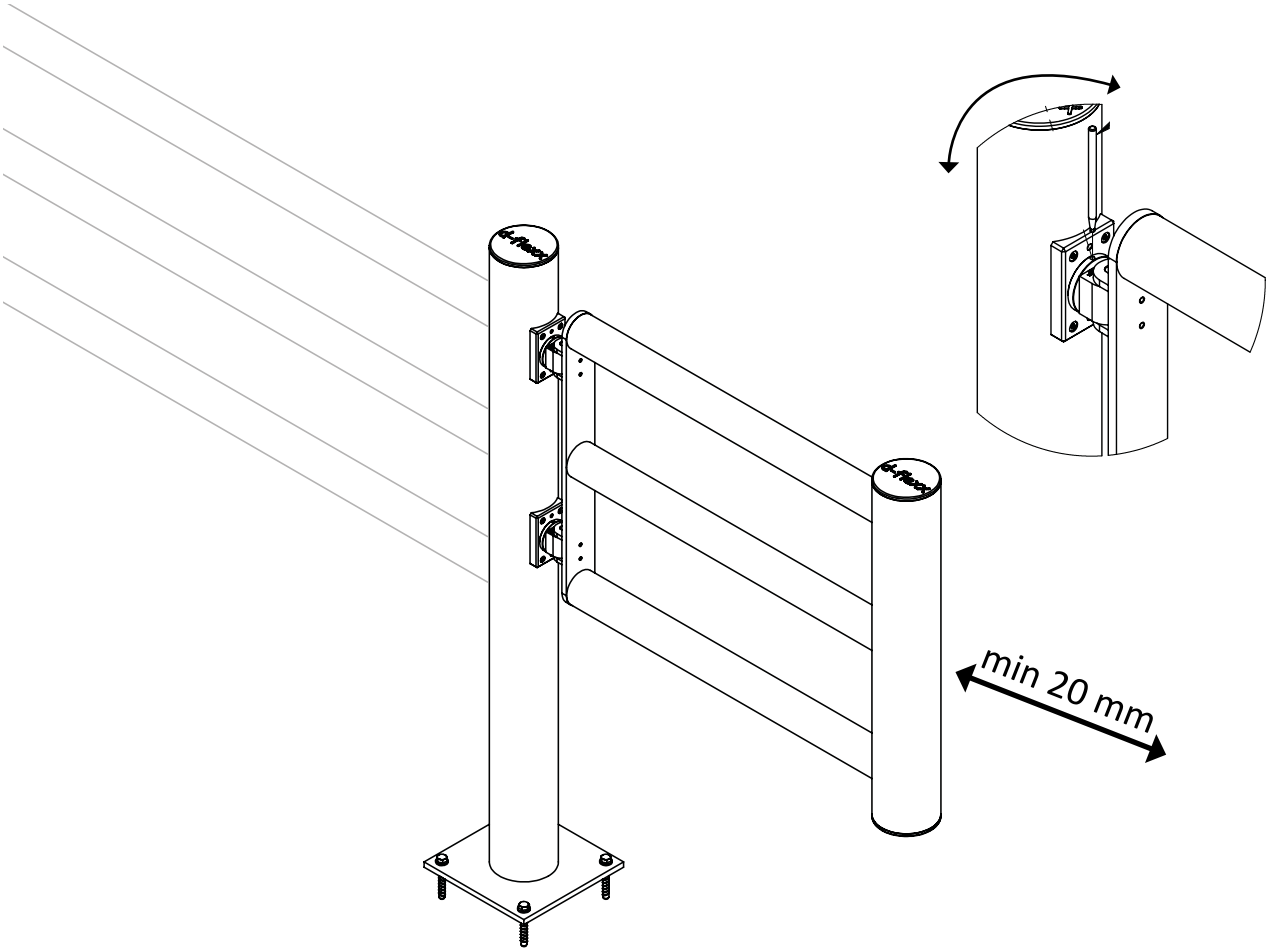
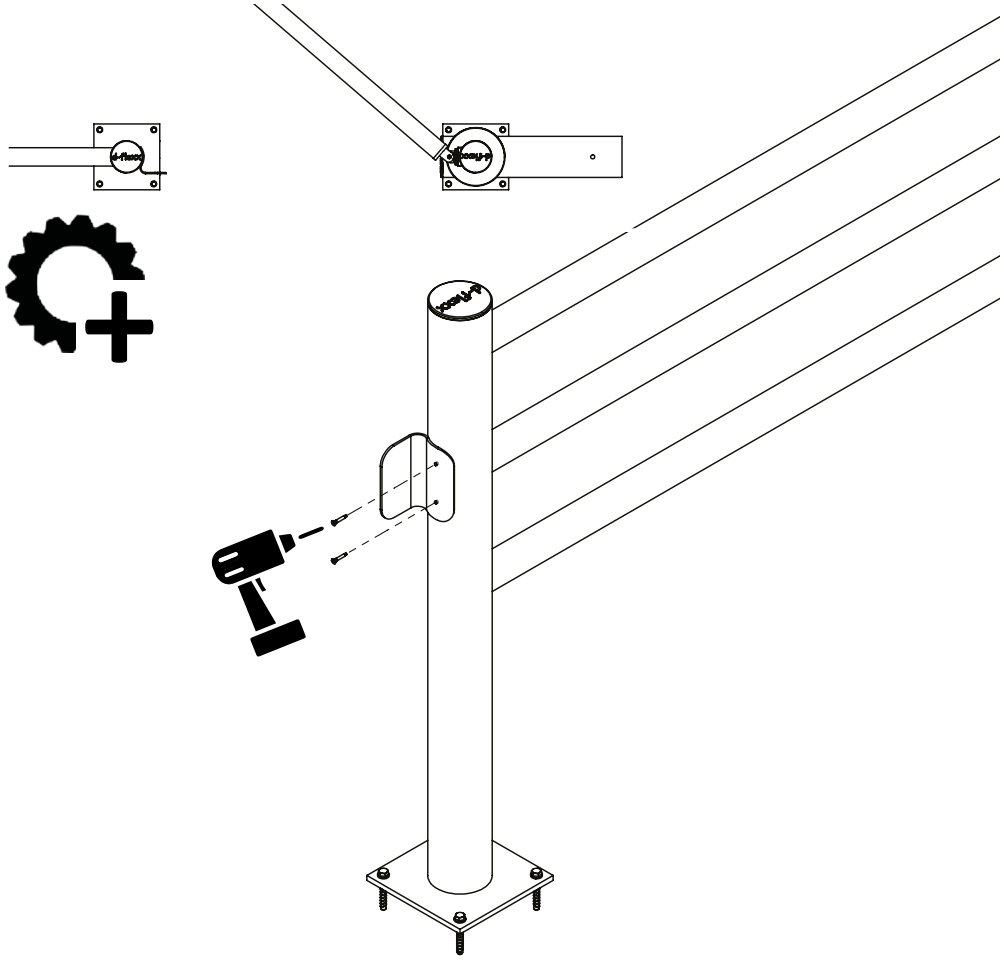
11