ASSEMBLY INSTRUCTION
– JUST FOLLOW ME

LINEAR SLIDING DOOR 60x40 MG

3D
INTERACTIVE
ASSEMBLY
INSTRUCTION

KIT 36906430

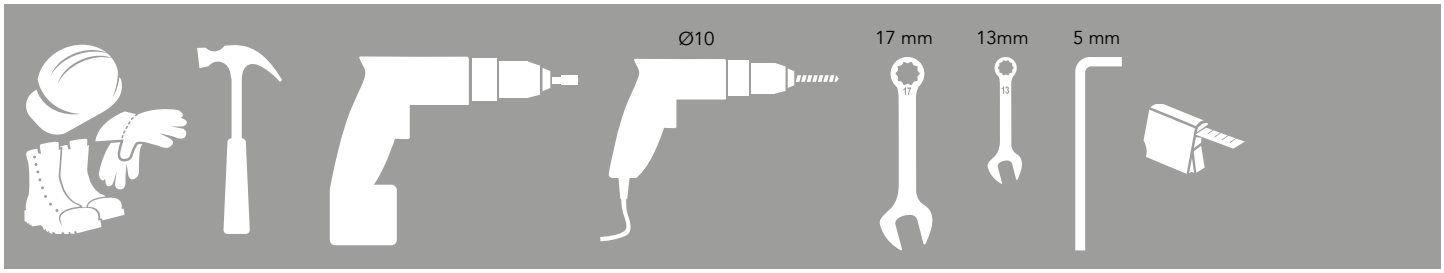

Linear sliding door 60x40

Kit 6430 Linear Sliding Door 36906430

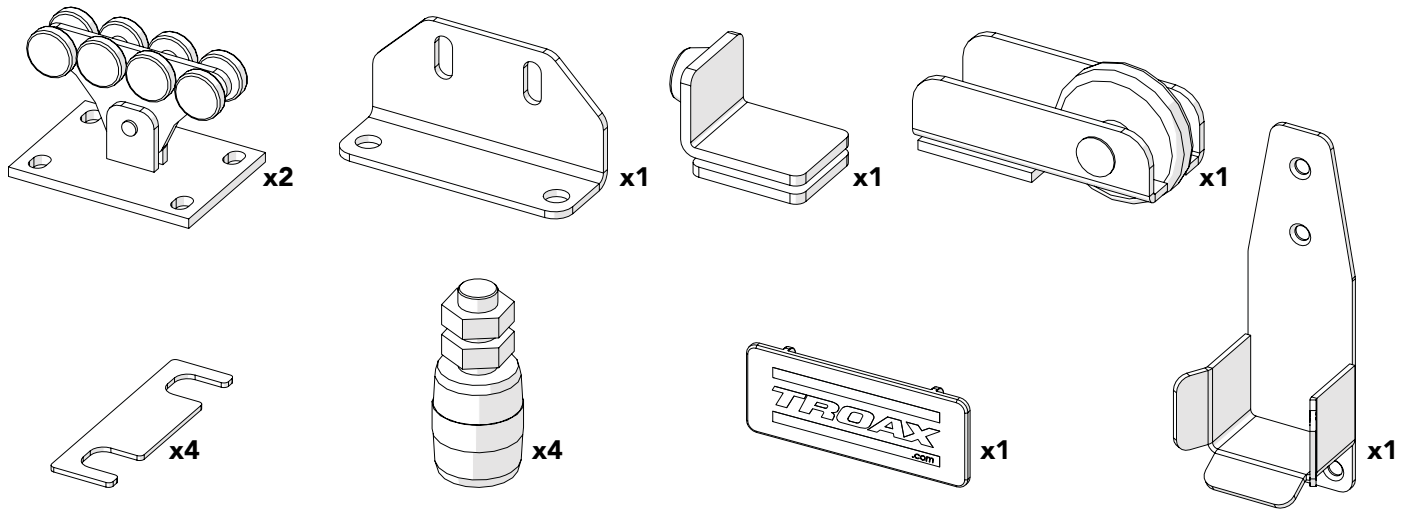

Bag for kit 6430 88696430

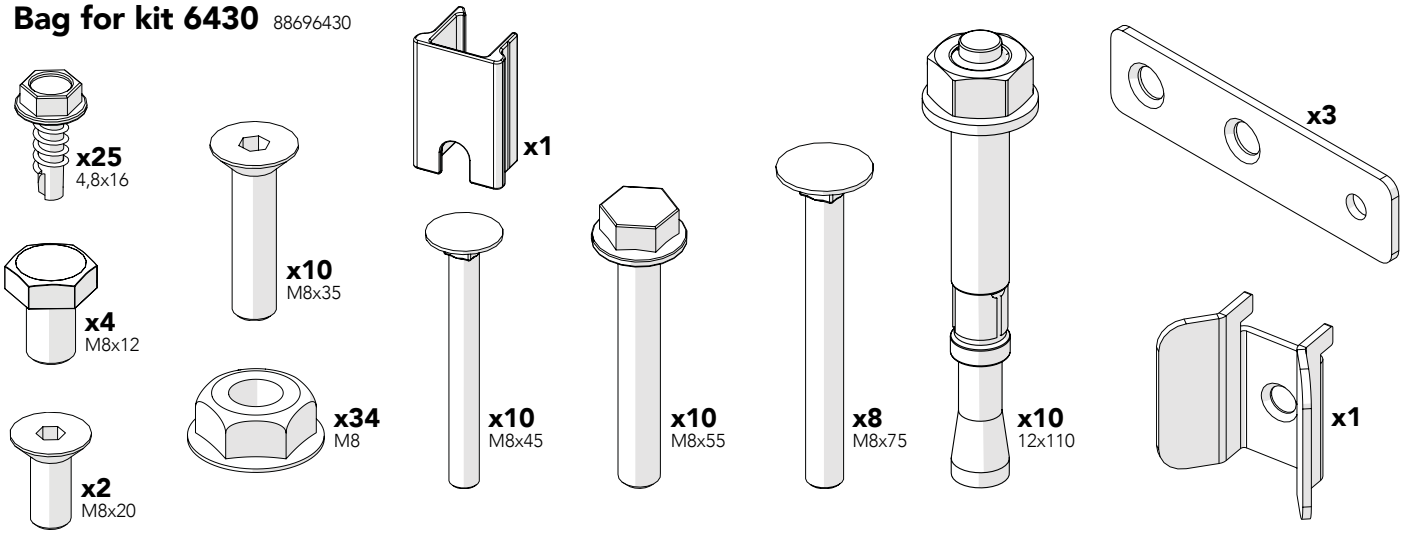

Kit Guide Linear 60x40 post 36906440

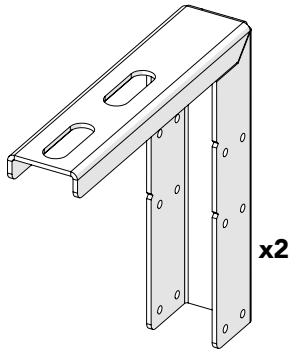

Kit Bracket SMF 36700074

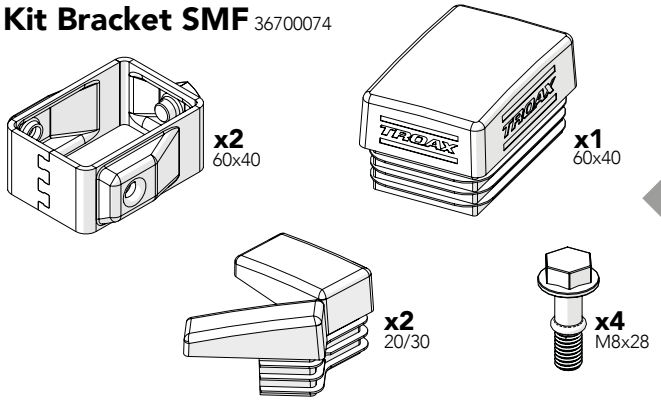

4

Art no: 88754748 ver. 004

High Linear sliding door

88754750

Kit Bracket SmF

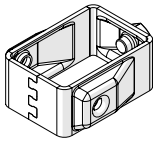

1

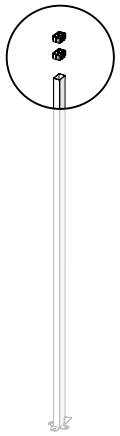

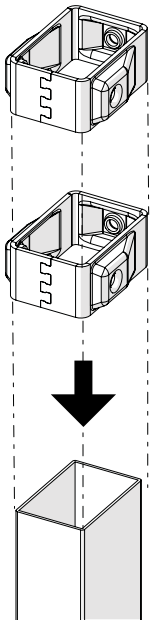

Kit Bracket SmF

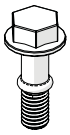

13

2

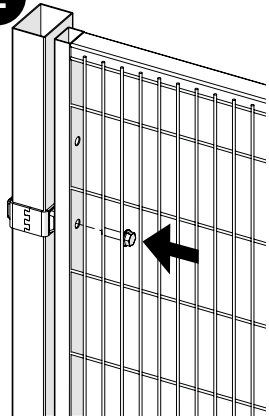

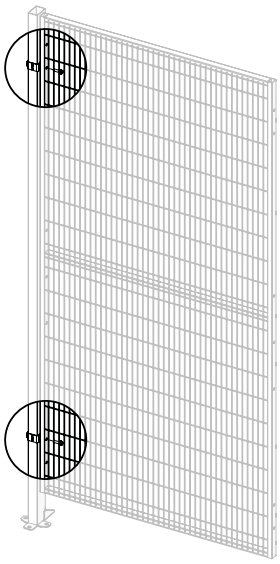

Kit Bracket SmF

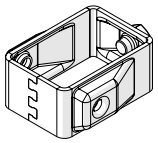

3

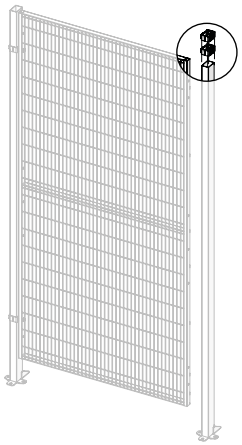

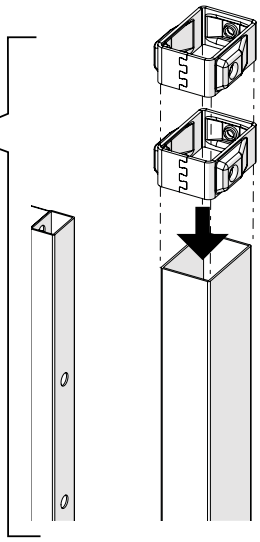

Kit Bracket SmF

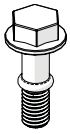

13

4

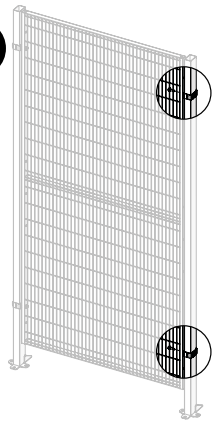

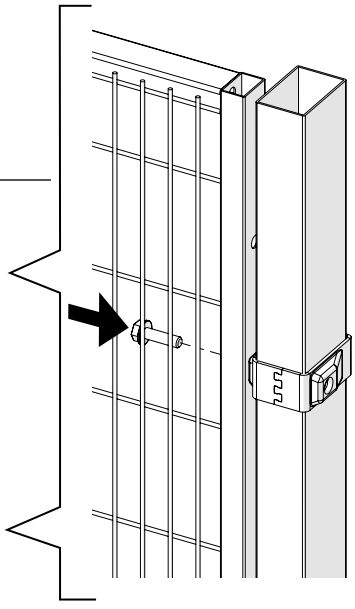

Kit Bracket SmF

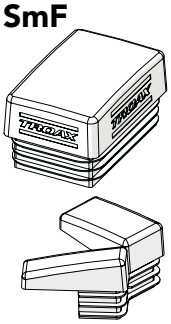

5

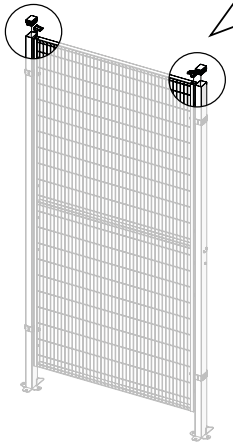

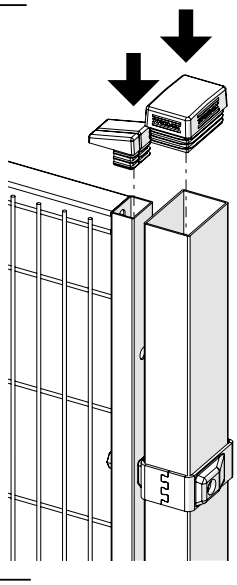

Art no: 88754748 ver. 004

Bag for kit 6430

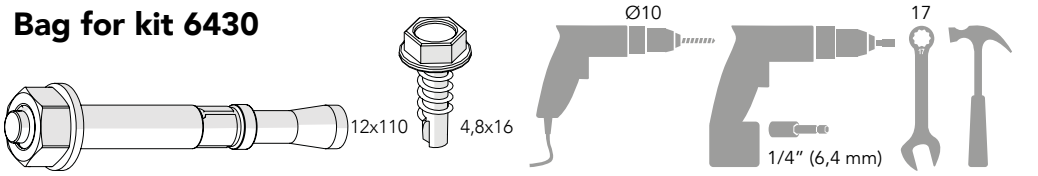

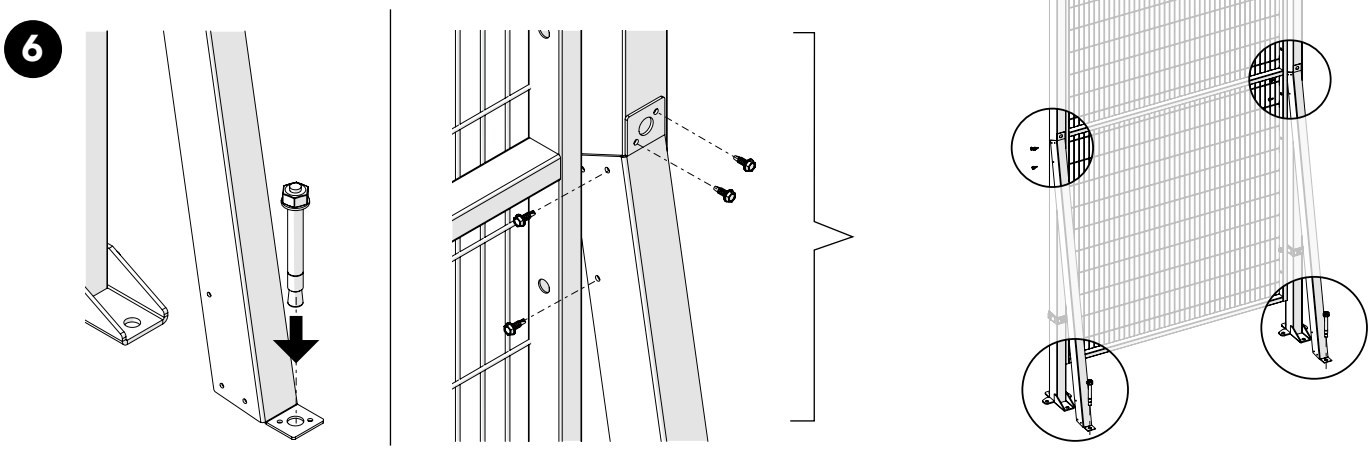

Kit 6430 Linear Sliding Door + Bag for kit 6430 + Kit Bracket SMF

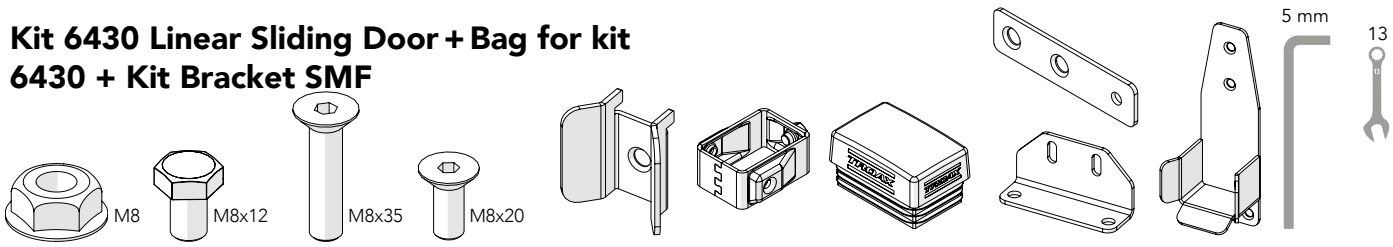

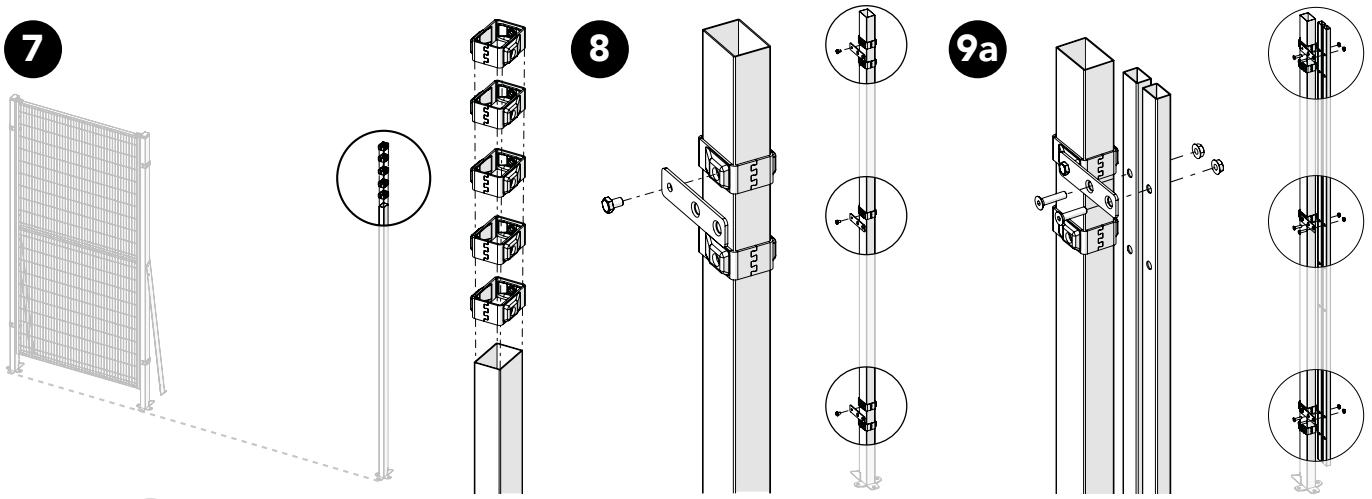

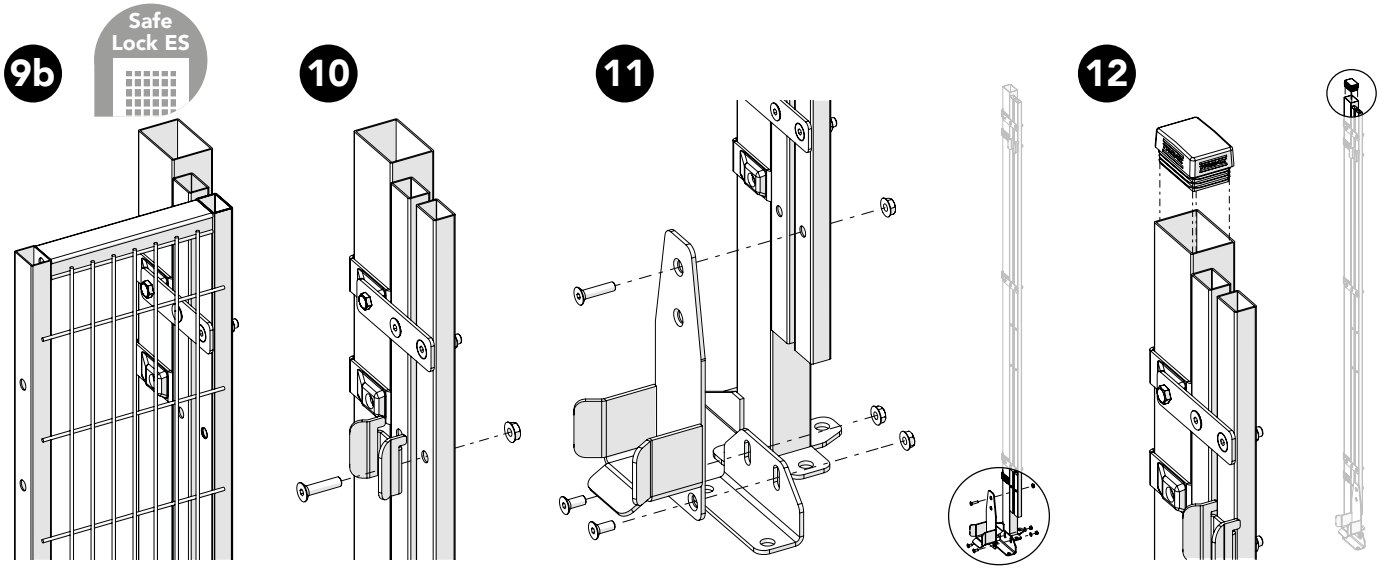

Art no: 887547 48 ver. 004

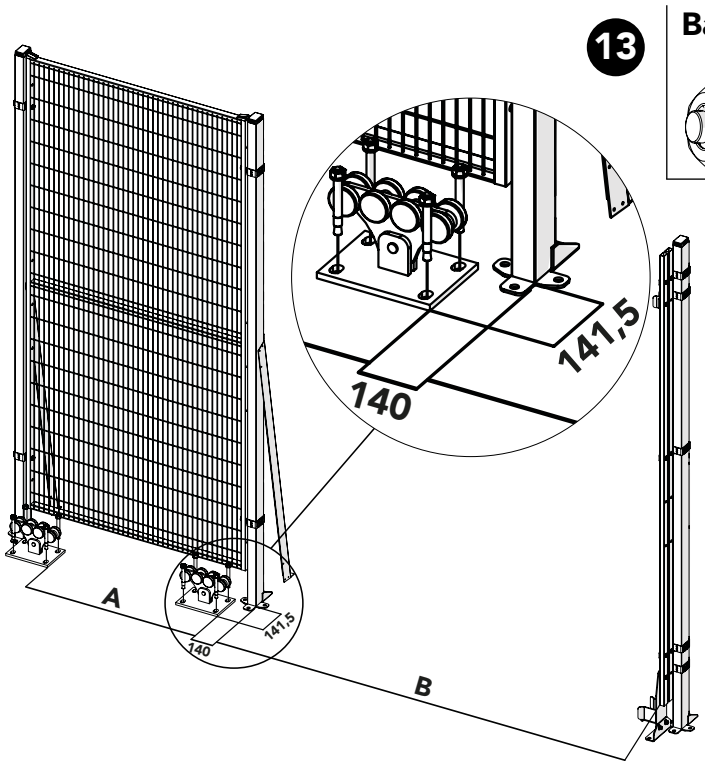

Bag for kit 6430

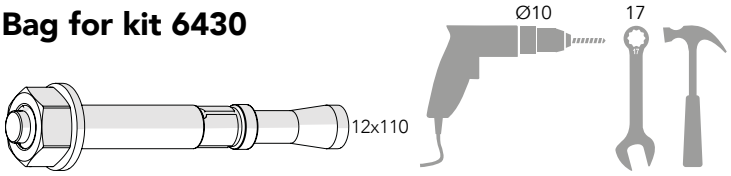

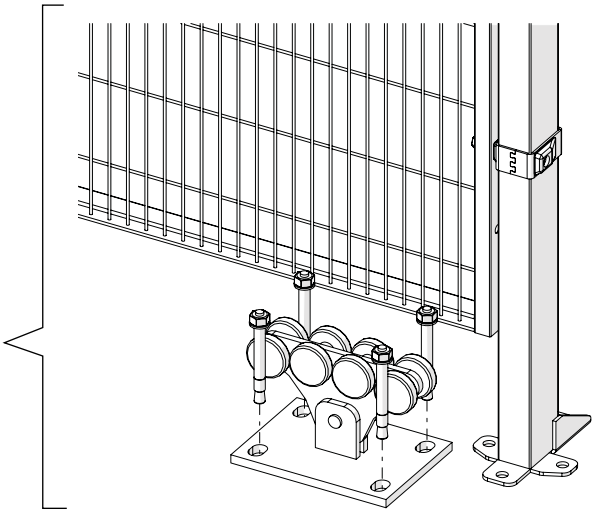

A	B	Safe Lock ES
730	1800	1980
1015	2500	2680
1015	3000	3180
1015	3500	3680
1255	4250	4430

Art no: 88754748 ver. 004

Bag for kit 6430

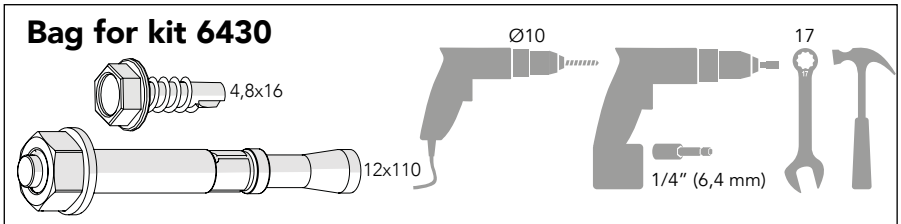

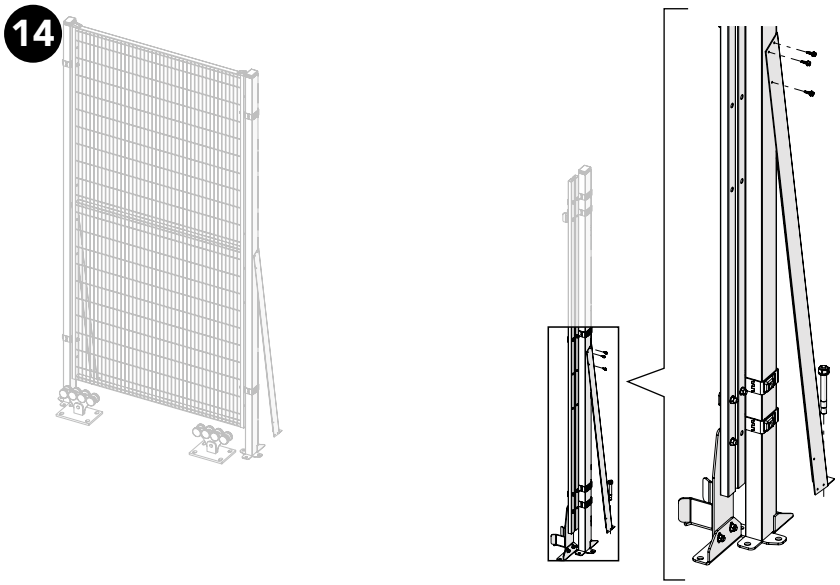

Kit 6430 Linear Sliding Door + Kit Guide Linear 60x40 post

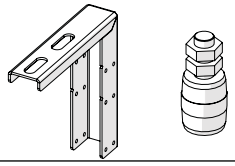

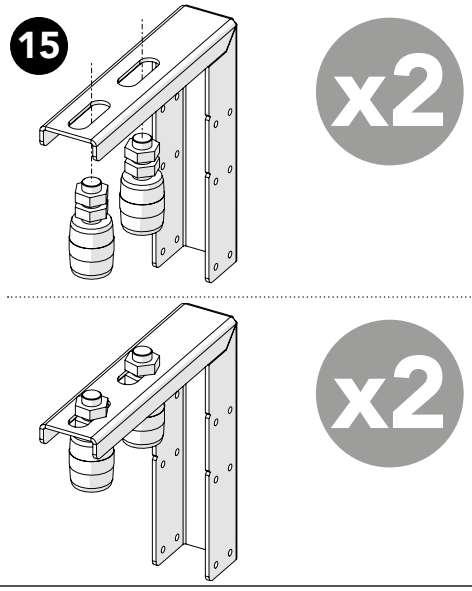

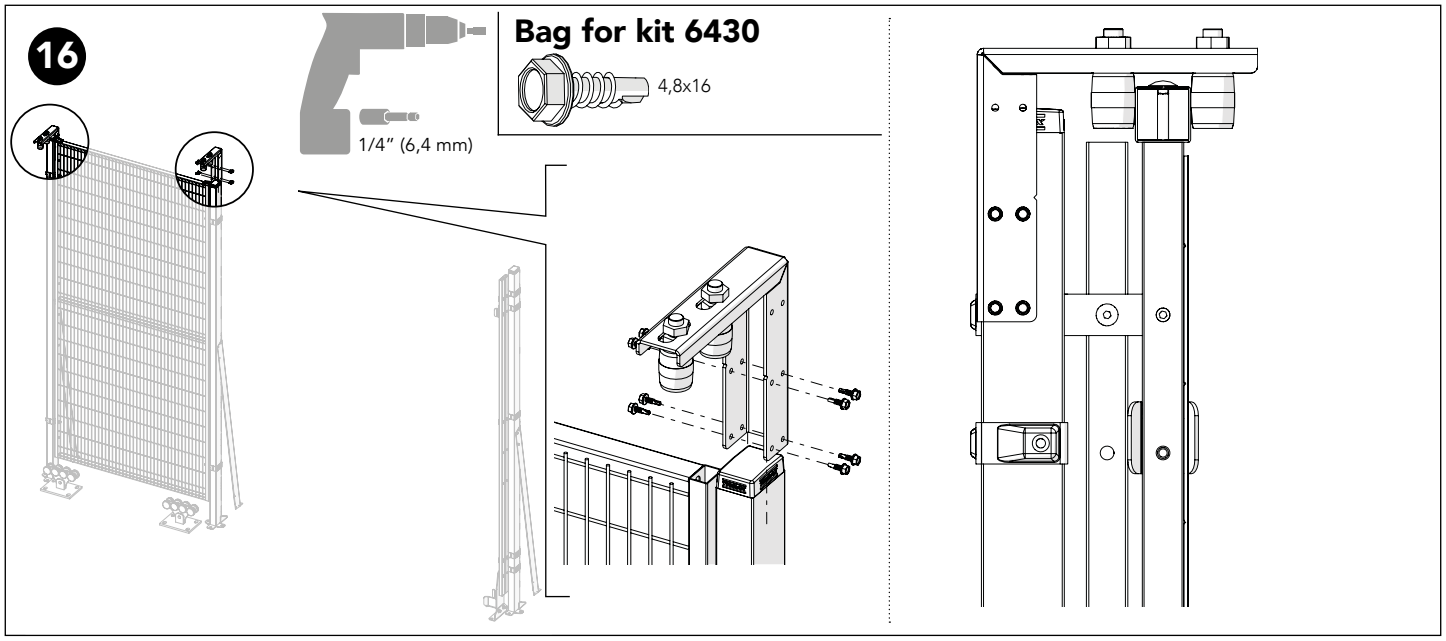

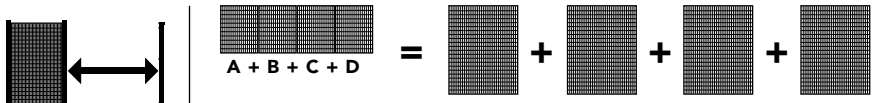

		A	B	C	D
1800	3000 mm	1500	1500		
2500	4000 mm	1500	1500	1000	
3000	4500 mm	1500	1500	1500	
3500	5000 mm	1000	1500	1500	1000
4250	6000 mm	1500	1500	1500	1500

Art no: 88754748 ver. 004

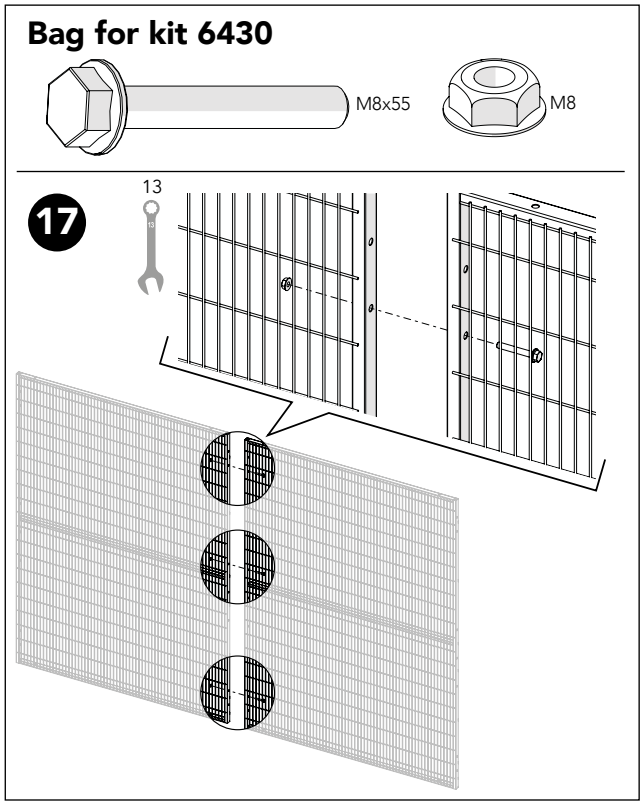

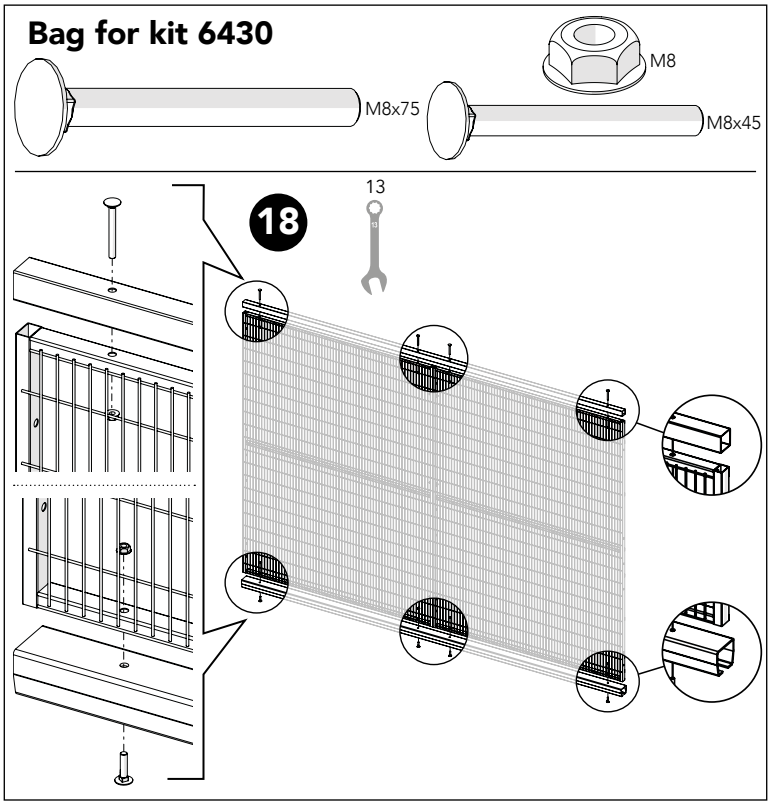

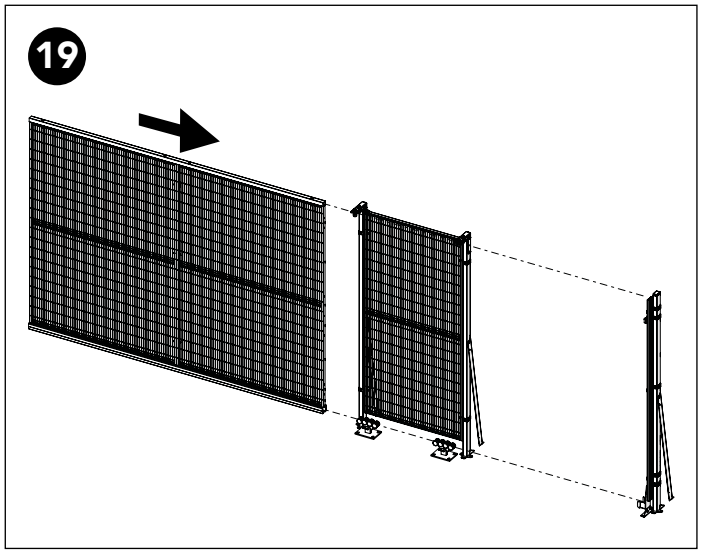

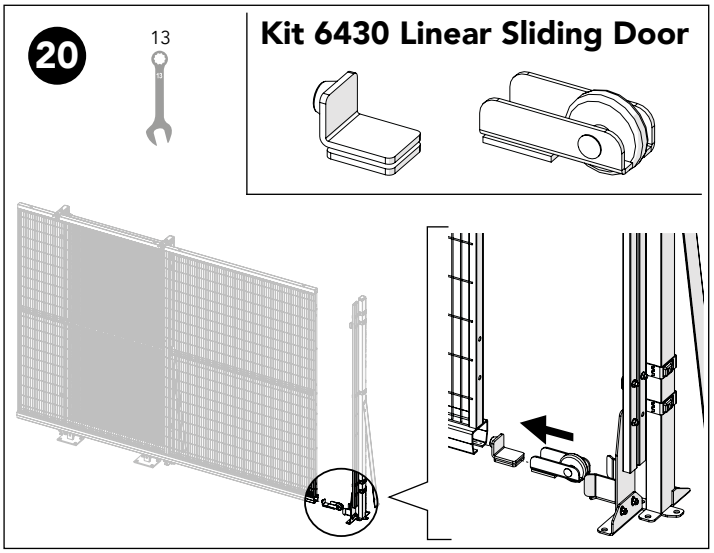

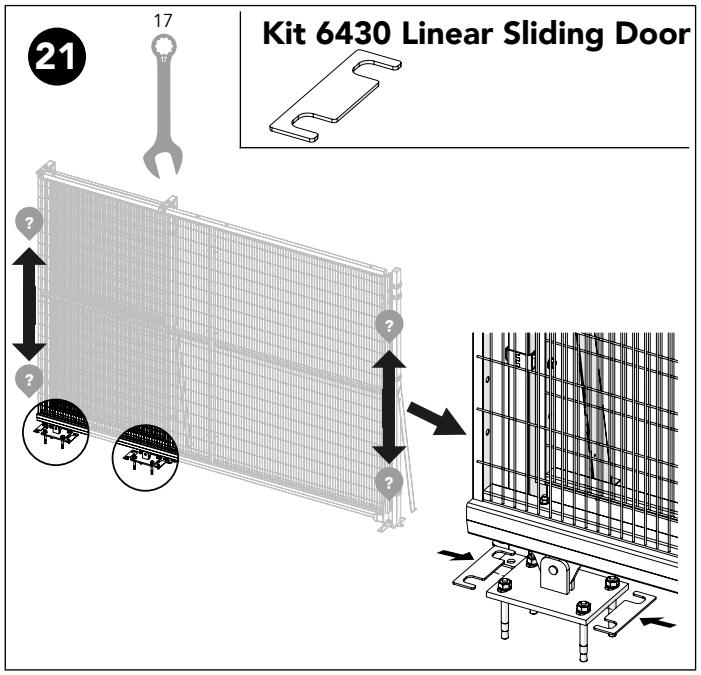

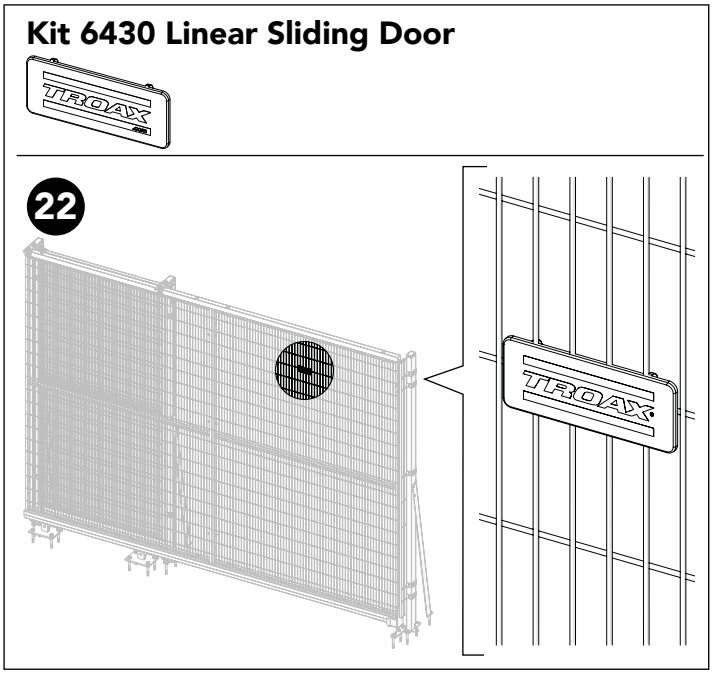

Art no: 88754748 ver. 004